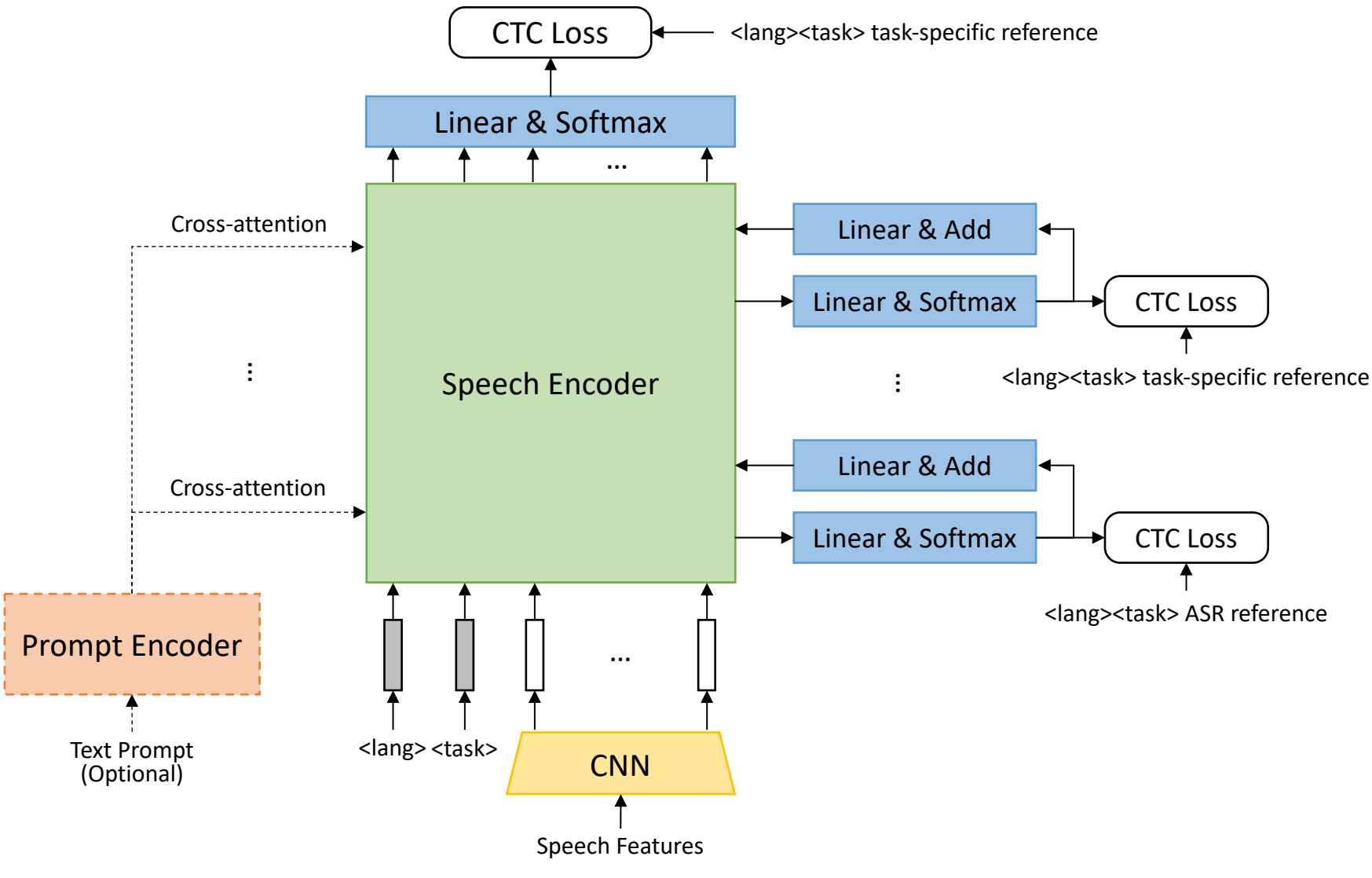
CTC Loss
<lang><task> task-specific reference
Linear & Softmax
...
Cross-attention
Linear & Add
Linear & Softmax
CTC Loss
Speech Encoder
<lang><task> task-specific reference
Cross-attention
Linear & Add
Linear & Softmax
CTC Loss
<lang><task> ASR reference
Prompt Encoder
...
Text Prompt
(Optional)
<lang> <task>
CNN
Speech Features