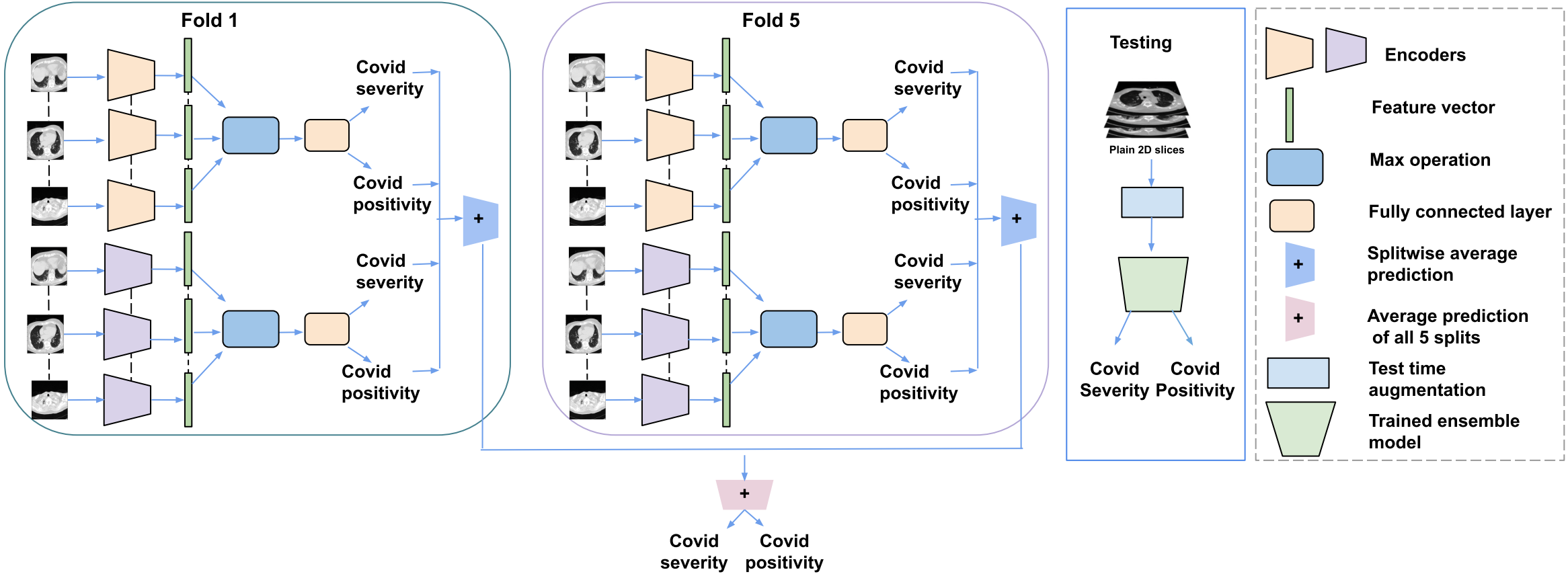
Fold 1
Covid severity
Covid positivity
Covid severity
Covid positivity
+
Fold 5
Covid severity
Covid positivity
Covid severity
Covid positivity
+
+
Covid severity
Covid positivity
Testing
Plain 2D slices
Covid Severity
Covid Positivity
Encoders
Feature vector
Max operation
Fully connected layer
Splitwise average prediction
Average prediction of all 5 splits
Test time augmentation
Trained ensemble model