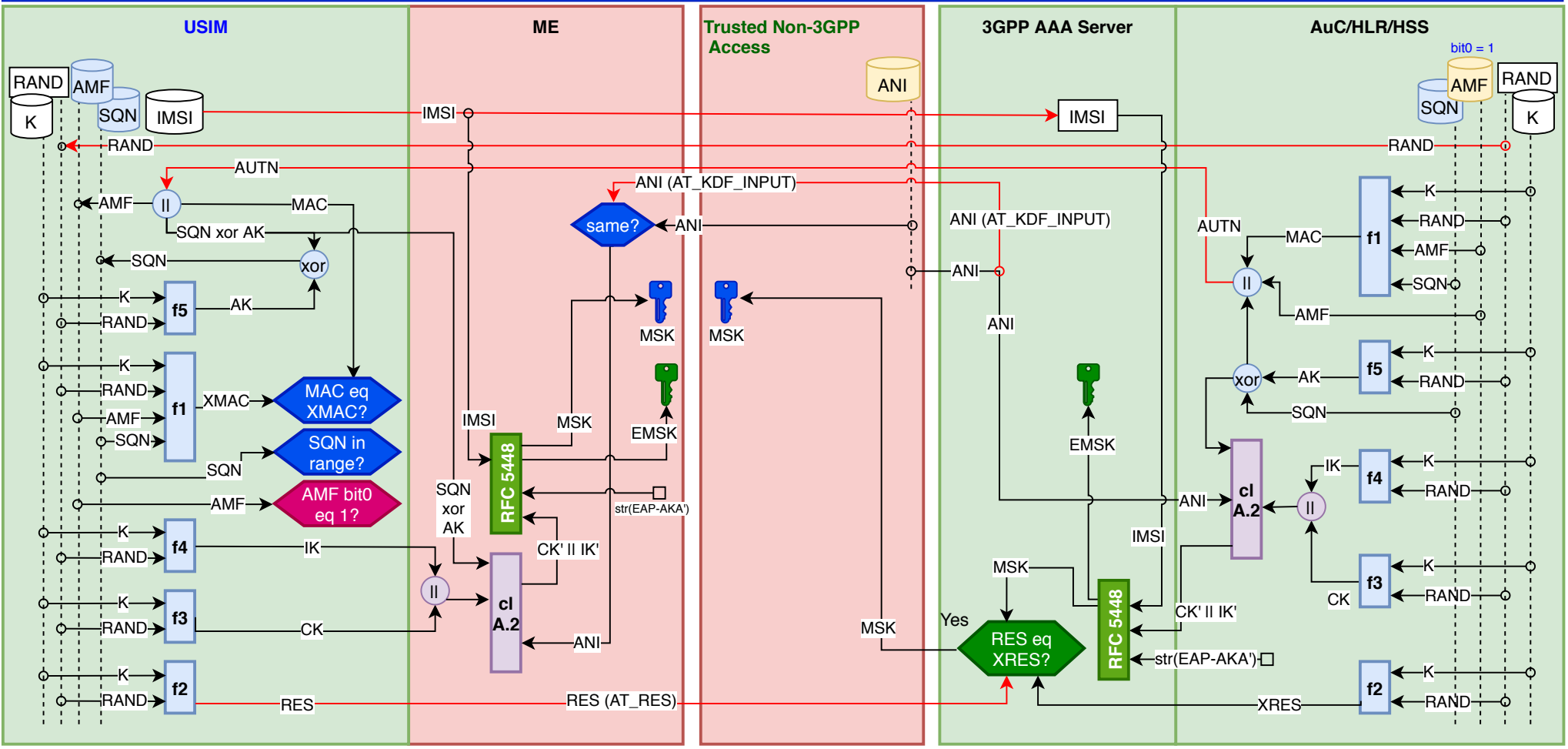4G/EPS EAP-AKA'