AE: for dimension reduction

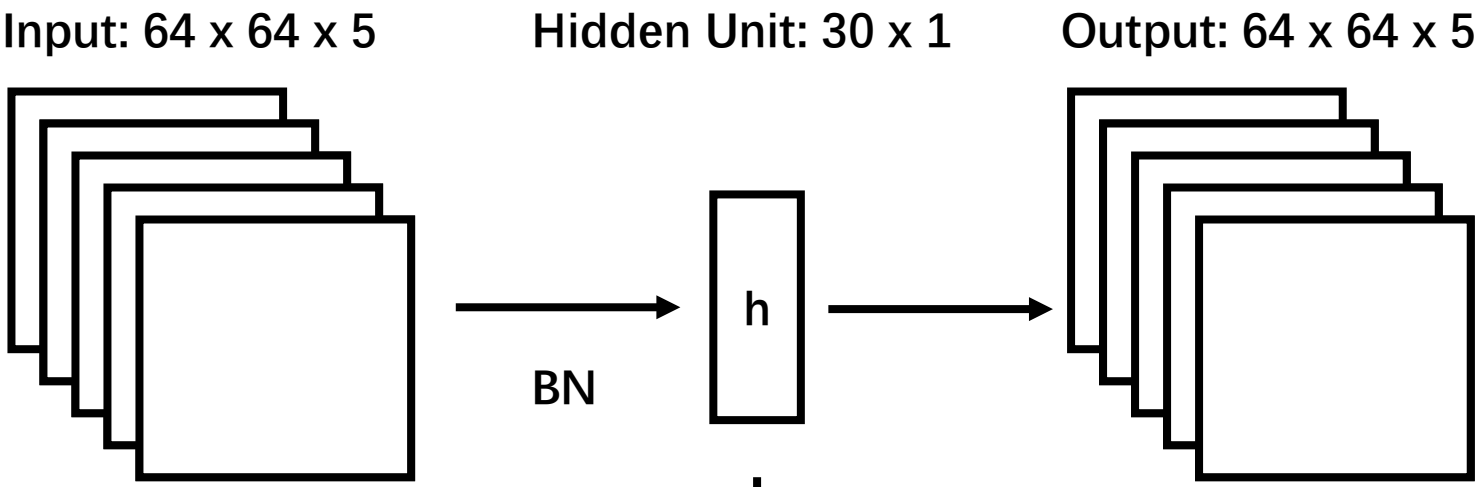

VAE: with revised prior for classification
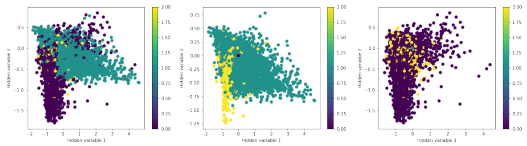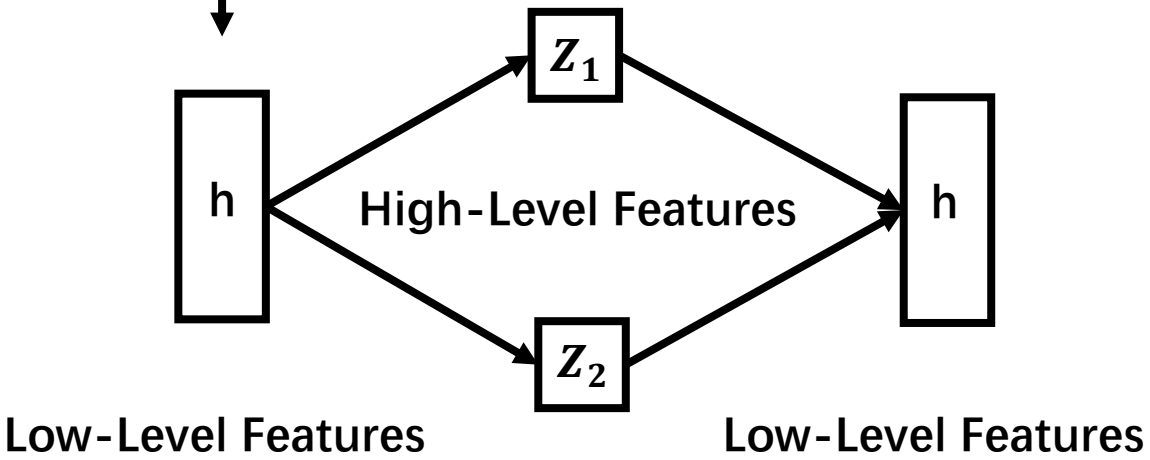
$h \sim N(0, I)$