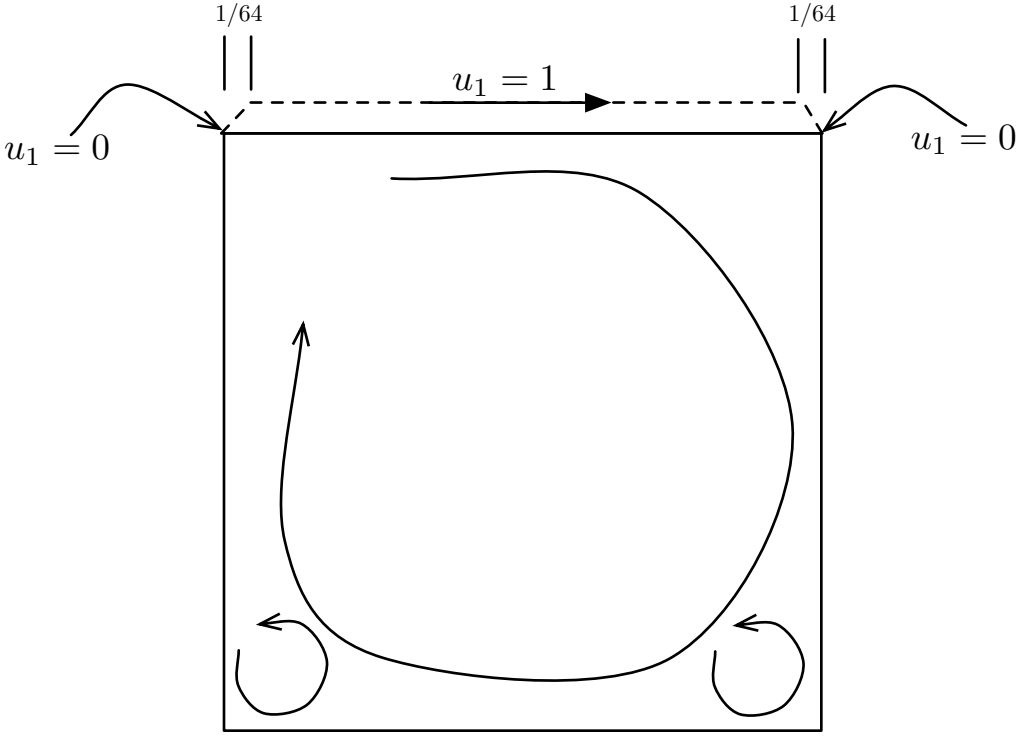
1/64
1/64
$u_1 = 1$
$u_1 = 0$
$u_1 = 0$