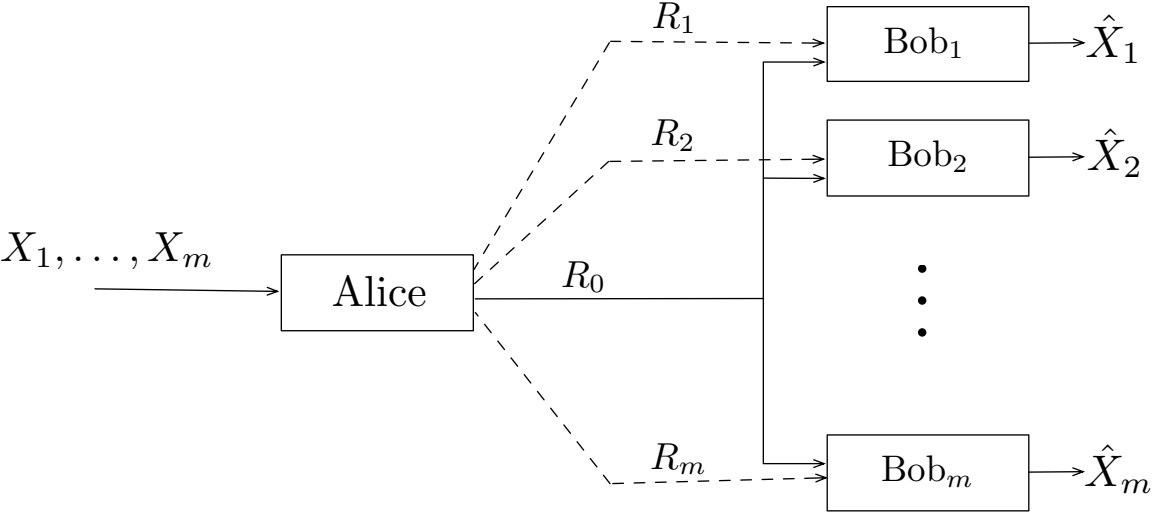
$X_1, \ldots, X_m$
Alice
R_1
R_2
R_0
R_m
Bob_1
Bob_2
Bob_m
$\hat{X}_1$
$\hat{X}_2$
$\hat{X}_m$