SISSA/23/2004/EP

arXiv:hep-th/0403252v1 25 Mar 2004

The Universality of Penrose Limits near Space-Time Singularities

M. Blau[a,1], M. Borunda[b,c,2], M. O'Loughlin[b,3], G. Papadopoulos[d,4]

[a] *Institut de Physique, Université de Neuchâtel, Rue Breguet 1*
CH-2000 Neuchâtel, Switzerland

[b] *ISAS – SISSA, Via Beirut 2-4, I-34013 Trieste, Italy*

[c] *INFN, Sezione di Trieste, Italy*

[d] *Department of Mathematics, King's College London*
London WC2R 2LS, U.K.

Abstract

We prove that Penrose limits of metrics with arbitrary singularities of power-law type show a universal leading u^{-2}-behaviour near the singularity provided that the dominant energy condition is satisfied and not saturated. For generic power-law singularities of this type the oscillator frequencies of the resulting homogeneous singular plane wave turn out to lie in a range which is known to allow for an analytic extension of string modes through the singularity. The discussion is phrased in terms of the recently obtained covariant characterisation of the Penrose limit; the relation with null geodesic deviation is explained in detail.

[1] e-mail: `matthias.blau@unine.ch`
[2] e-mail: `mborunda@he.sissa.it`
[3] e-mail: `loughlin@sissa.it`
[4] e-mail: `gpapas@mth.kcl.ac.uk`

Contents

1 Introduction **2**

2 Penrose Limits via Geodesic Deviation **5**

2.1 The Penrose Limit and the Null Geodesic Deviation Equation 6

2.2 Penrose Limits, Geodesic Congruences and Hamilton-Jacobi Equations 8

2.3 The Penrose Limits of a Static Spherically Symmetric Metric 9

3 Examples **11**

3.1 Schwarzschild Plane Waves and their Homogeneous Near-Singularity Limits . . . 11

3.2 FRW Plane Waves and their Homogeneous Near-Singularity Limits 14

4 The Universality of Penrose Limits of Power-Law Type Singularities **18**

4.1 Szekeres-Iyer Metrics 18

4.2 Null Geodesics of Szekeres-Iyer Metrics 20

4.3 Penrose Limits of Power-Law Type Singularities 21

4.4 The Role of the Dominant Energy Condition 23

5 Discussion **27**

A Hamilton-Jacobi Equations, Geodesic Congruences and Adapted Coordinates **29**

B Generalisations: Brane Metrics, Isotropic Coordinates, Null Singularities **32**

C Curvature of Szekeres-Iyer Metrics **34**

References **35**

1 Introduction

The results of [1, 2, 3, 4, 5] have led to renewed interest in the Penrose limit construction [6, 7, 8]. The Penrose limit associates to every space-time metric $g_{\mu\nu}$ and choice of null geodesic γ in that space-time a plane wave metric

$$ds^2 = g_{\mu\nu}dx^\mu dx^\nu \to 2dudv + A_{ab}(u)x^a x^b du^2 + d\vec{x}^2 \quad . \tag{1.1}$$

Here $A_{ab}(u)$ is the plane wave profile matrix and the computation of the Penrose limit along $\gamma(u)$ amounts to determining the matrix $A_{ab}(u)$ from the original metric $g_{\mu\nu}$.

Recently, in [9] a simple covariant characterisation and definition of the Penrose limit wave profile matrix $A_{ab}(u)$ was obtained which does not require taking any limit and which shows that $A_{ab}(u)$ directly encodes diffeomorphism invariant information about the original space-time metric. The geometric significance of $A_{ab}(u)$ (and hence of the Penrose limit) turns out to be that it is the standard [10, Section 4.2] *transverse null geodesic deviation matrix* of the original metric along the null geodesic $\gamma(u)$.

The relevance of this result lies in the fact that it tells us precisely which aspects of the original background, namely covariant information about the rate of growth of curvature and geodesic deviation along a null geodesic, are detected by the Penrose limit and hence probed by, say, string theory in the resulting plane wave background.

In particular, as a first step towards studying string propagation in singular (and perhaps time-dependent) space-time backgrounds, it is then of interest to determine the Penrose limits of space-time singularities in general. And here we find a pleasant surprise, namely a remarkably universal behaviour of Penrose limits of space-time singularities.

It had already been found for a variety of particular brane and cosmological backgrounds (see e.g. [8, 11, 12, 13]) that the exact Penrose limit is characterised by a wave profile of the special form

$$A_{ab}(u) \sim u^{-2} \quad . \tag{1.2}$$

Plane wave metrics with precisely such a profile have the scale invariance $(u, v) \to (\lambda u, \lambda^{-1} v)$ and are thus *homogeneous* singular plane waves (HPWs) [8, 14, 15]. Without loss of generality, $A_{ab}(u)$ can be chosen to be diagonal and, anticipating the interpretation of the entries of A_{ab} as harmonic oscilator frequencies, we will parametrise $A_{ab}(u)$ as

$$A_{ab}(u) = -\omega_a^2 \delta_{ab} u^{-2} \quad , \tag{1.3}$$

where ω_a^2 can be positive or negative.

Moreover, in [16, 9] we observed that the Penrose limit of space-time singularities of cosmological FRW and Schwarzschild-like metrics, i.e. the leading behaviour of the profile $A_{ab}(u)$ as one approaches the singularity, is also of the above form. This led us to the

> **Conjecture:** Penrose limits of (in some suitable sense physically reasonable) space-time singularities are singular homogeneous plane waves with wave profile $A_{ab}(u) \sim u^{-2}$.

Given the above relation between Penrose limits and geodesic deviation, this amounts to the conjecture that null geodesic deviation shows a universal u^{-2}-behaviour near such space-time singularities.

The main result of this paper is the proof of this conjecture for a large class of spherically symmetric space-time singularities known as "singularities of power-law type" or Szekeres-Iyer metrics [17, 18]. These can be spacelike, timelike or null singularities, and encompass practically all known spherically symmetric singular solutions of the Einstein equations. For technical reasons we focus on the spacelike and timelike singularities.

It is evident that, in order to be able to say anything of substance about the behaviour near a singularity, some supplementary energy condition has to be imposed. This is what we will do and, specifically, we will prove that

> Penrose Limits of spherically symmetric spacelike or timelike singularities of power-law type satisfying (but not saturating) the Dominant Energy Condition (DEC) are singular homogeneous plane waves of the type (1.3).

Particle and wave propagation in the background (1.3) exhibit a qualitatively different behaviour for the 'frequency squares' ω_a^2 bounded by 1/4 from above or below. In all the explicit examples that had been worked out one finds that ω_a^2 is in the range $\omega_a^2 \leq 1/4$. We will show that this is indeed also the generic behaviour:

> The resulting frequency squares ω_a^2 are bounded from above by 1/4 unless one is on the border to an extremal equation of state.

Here by "extremal" we mean, following the terminology of [17], near-singularity energy-momentum tensors saturating the DEC, and "border" refers to a border in the Szekeres-Iyer phase diagrams [17], or Figure 2 in section 4.4 of the present paper.

The explicit proof and examples of metrics displaying a different, more singular, behaviour illustrate that this universal u^{-2}-behaviour is not simply a consequence of dimensional analysis. Rather, it is the strong form of the DEC which guarantees that the singularity is no worse than this and, in fact, precisely sufficiently benign (due to the bound on the frequencies) to allow for a consistent string propagation through the singularity (see e.g. [19, 14]). The fact that large classes of physically reasonable metrics with space-time singularities give rise to such a behaviour is certainly encouraging and perhaps somewhat unexpected.

In section 2 we discuss the geodesic deviation approach to Penrose Limits. In section 2.1 we describe how to define and calculate the transverse null geodesic deviation matrix. We also establish the equivalence of the characterisation of $A_{ab}(u)$ in terms of the

Riemann tensor of the original metric, obtained in [9], and the description in terms of geodesic deviation we will use here. Section 2.2 contains some related comments on null congruences and solutions to the Hamilton-Jacobi equations. In section 2.3, as an illustration of the geodesic deviation method, and as preparation for the calculations of sections 3 and 4, we determine all the Penrose limits of a static spherically symmetric metric.

In section 3 we apply these results to the Schwarzschild and cosmological FRW metrics, obtain the general Penrose limits and discuss in some detail the emergence of the u^{-2} singular HPW behaviour in their near-singularity limits. The FRW metrics in particular, with the freedom in specifying their perfect-fluid equation of state, will allow us to anticipate some of the features that will then reappear in the general discussion of section 4.

In section 4 we introduce the Szekeres-Iyer metrics (section 4.1), analyse their null geodesics (section 4.2) and their Penrose limits (sections 4.3). In section 4.4 we supplement this by an analysis of the DEC in these models and prove the two statements made above. Finally, section 5 contains various comments on applications of these results to string theory, open questions and future work.

Even though somewhat outside the main line of this paper, in Appendix A we elaborate, following the suggestion of [12], how to use solutions of the Hamilton-Jacobi equations and their corresponding null geodesic congruences to construct adapted coordinates which are the starting point of the more traditional approach [6, 8] to Penrose limits. Appendix B summarises some minor variations of the calculations of section 2.3, and in Appendix C we list the non-vanishing components of the Ricci and Einstein tensors for the near-singularity Szekeres-Iyer metrics.

2 Penrose Limits via Geodesic Deviation

In [9] it was shown that the wave profile $A_{ab}(u)$ of the Penrose limit plane wave metric associated to a null geodesic γ in a space-time with metric $g_{\mu\nu}$ can be obtained directly from the curvature tensor of the original metric,

$$A_{ab}(u) = -R_{a+b+}|_\gamma \quad . \tag{2.1}$$

Here the components refer to a parallel pseudo-orthonormal frame along γ,

$$ds^2|_\gamma = 2E^+E^- + \delta_{ab}E^aE^b \tag{2.2}$$

with $E_+ \equiv \partial_u$ the tangential direction.

This relation is reminiscent of, but should not be confused with, the well-known relation

$$\bar{R}_{aubu} = -A_{ab}(u) \tag{2.3}$$

expressing the sole non-vanishing curvature component of the plane wave metric

$$d\bar{s}^2 = 2dudv + A_{ab}(u)x^a x^b du^2 + d\vec{x}^2 \tag{2.4}$$

in terms of $A_{ab}(u)$. Indeed, the key observation of [9] in this respect was that these curvature components are directly related to those of the original (pre-Penrose limit) metric via (2.1).

Equivalently, $A_{ab}(u)$ can be characterised as the transverse null geodesic deviation matrix [10, Section 4.2] of the original metric,

$$\frac{d^2}{du^2} Z^a = A_{ab}(u) Z^b \quad , \tag{2.5}$$

with Z the transverse geodesic deviation vector.

The equivalence of (2.5) and the characterisation (2.1) of $A_{ab}(u)$ obtained in [9] is a standard result in the theory of null congruences (essentially the Raychaudhuri equation). We have found that in practice this is not only a geometrically transparent but frequently also a calculationally efficient way of determining the wave profile $A_{ab}(u)$, and for this reason we will explain this procedure in some detail in this section.

2.1 The Penrose Limit and the Null Geodesic Deviation Equation

To establish the relation between (2.1) and (2.5), we embed the null geodesic γ into some (arbitrary) null geodesic congruence. Via parallel transport one can construct a parallel pseudo-orthonormal frame E^A, $A = +, -, a$, along the null geodesic congruence,

$$ds^2 = 2E^+E^- + \delta_{ab}E^aE^b \quad , \qquad \nabla_u E^A = 0 \tag{2.6}$$

such that the component E_+ of the co-frame E_A is

$$E_+ = \dot{x}^\mu \partial_\mu \ , \qquad E_+|_\gamma = \partial_u \quad , \tag{2.7}$$

i.e. the restriction of E_+ to every null geodesic is the tangent vector of the null geodesic.

Infinitesimally the congruence is characterised by the *connecting vectors* Z representing the separation of corresponding points on neighbouring curves and satisfying the equation

$$L_{E_+} Z = [E_+, Z] = \nabla_{E_+} Z - \nabla_Z E_+ = 0 \quad . \tag{2.8}$$

In a parallel frame, covariant derivatives along the congruence become partial derivatives,

$$E_+^\mu \nabla_\mu (Z^A E_A) = \nabla_u (Z^A E_A) = (\partial_u Z^A) E_A \quad , \tag{2.9}$$

and since E_+ is null one has

$$g(E_+, E_+) = 0 \Rightarrow (\nabla_A E_+)^- = 0 \quad . \tag{2.10}$$

Hence (2.8) implies that $(d/du)Z^- = 0$, and we can set $Z^- = 0$ without loss of generality. Then, using the geodesic equation $\nabla_u E_+ = 0$, one finds that

$$\nabla_Z E_+ = Z^b (\nabla_b E_+)^a E_a + Z^b (\nabla_b E_+)^+ E_+ \tag{2.11}$$

and the connecting vector equation (2.8) becomes

$$\frac{d}{du} Z^a = B^a_{\ b} Z^b \tag{2.12}$$

with

$$B^a_{\ b} = (\nabla_b E_+)^a \equiv E^a_\nu E^\mu_b \nabla_\mu E^\nu_+ \quad , \tag{2.13}$$

and Z^+ determined by the Z^a via

$$\frac{d}{du} Z^+ = Z^b (\nabla_b E_+)^+ \quad . \tag{2.14}$$

For later use we note that (2.10) implies that the trace of B is

$$\mathrm{tr}\, B \equiv B^a_{\ a} = \nabla_\mu E^\mu_+ = \frac{1}{\sqrt{-g}} \partial_\mu (\sqrt{-g} \dot{x}^\mu) \quad , \tag{2.15}$$

explaining the ubiquity of logarithmic derivatives in the examples to be discussed below.

It follows from (2.12) that the transverse components Z^a satisfy the null geodesic deviation equation

$$\frac{d^2}{du^2} Z^a = A_{ab}(u) Z^b \quad . \tag{2.16}$$

where

$$A^a_{\ b} = \frac{d}{du} B^a_{\ b} + B^a_{\ c} B^c_{\ b} \quad . \tag{2.17}$$

Note that (2.16) is just a (time-dependent) harmonic oscillator equation with $(-A_{ab}(u))$ the matrix of frequency squares.

A routine calculation now shows that

$$A^a_{\ b} = E^a_\nu E^\mu_b R^\nu_{\ \lambda\rho\mu} \dot{x}^\lambda \dot{x}^\rho = -R^a_{\ +b+} \quad , \tag{2.18}$$

with R the Riemann curvature tensor of the metric g, establishing the equivalence of (2.1) and (2.5).

Alternatively, this can be understood in terms of the standard evolution equations for the expansion, shear and twist of a null geodesic congruence (see e.g. [10, Section 4.2] or [20, Section 9.2]), which are equal to the trace, trace-free symmetric and anti-symmetric part of B_{ab},

$$B_{ab} = E_a^\nu E_b^\mu \nabla_\mu p_\nu \ , \qquad p_\nu = g_{\nu\lambda}\dot{x}^\lambda \ , \tag{2.19}$$

respectively. From this point of view, the symmetry of A_{ab}, i.e. the vanishing of the antisymmetric part of $\dot{B} + B^2$, is equivalent to the evolution equation for the twist, and the equivalence of (2.1) and (2.5) is the content of the evolution equation for the symmetric part of B_{ab} whose trace is the Raychaudhuri equation for null geodesics.

We see from (2.18) that, even though B_{ab} depends on the properties of the null geodesic congruence, the particular combination of expansion, shear and twist and their derivatives appearing in A_{ab} depends only on the components of the curvature tensor and the parallel frame along the original null geodesic. In particular, the geodesic deviation matrix $A_{ab}(u)$ is independent of how the null geodesic γ is embedded into some null congruence.

2.2 Penrose Limits, Geodesic Congruences and Hamilton-Jacobi Equations

Using the geodesic deviation approach to calculate Penrose limits, as outlined above, is obviously a geometrically transparent and appealing way of interpreting the Penrose Limit and determining $A_{ab}(u)$. It is somewhat less economical (economical in the sense of introducing the least amount of additional structure) than the characterisation (2.1) of $A_{ab}(u)$ in terms of the Riemann tensor, which only requires a parallel frame along the original null geodesic and not an entire geodesic congruence. However, it may nevertheless be a calculationally more efficient approach if one is in a situation where one has a natural candidate geodesic congruence (so that one does not have to construct one first). In this case, the calculation of $A_{ab}(u)$ via geodesic deviation provides a shortcut to the calculation of the relevant components of the Riemann tensor.

Both these covariant characterisations of the Penrose Limit are certainly more elegant than the standard systematic aproach to determining Penrose Limits [6, 7, 8] which not only relies on the existence of some special (twist-free) null geodesic congruence, but also requires other auxiliary constructs like Penrose coordinates (i.e. coordinates adapted to the congruence) and the coordinate transformation from Rosen to Brinkmann coordinates. Nevertheless, this is still frequently a useful way of performing calculations, in particular when combined with the systematic Hamilton-Jacobi approach to constructing adapted coordinates first pointed out in [12], and for this reason we provide a more

detailed account of this construction in Appendix A.

In practice, therefore, the geodesic deviation approach is useful if there is a natural geodesic congruence. Such a null geodesic congruence can be easily constructed whenever one has a solution to the Hamilton-Jacobi equation

$$g^{\mu\nu}\partial_\mu S\partial_\nu S = 0 \tag{2.20}$$

for null geodesics. Indeed, setting

$$\dot{x}^\mu = g^{\mu\nu}\partial_\nu S \ , \tag{2.21}$$

one obviously has

$$\dot{x}^\rho\nabla_\rho\dot{x}^\mu = g^{\rho\sigma}g^{\mu\nu}\nabla_\rho\partial_\nu S\partial_\sigma S = \frac{1}{2}g^{\mu\nu}\partial_\nu(g^{\rho\sigma}\partial_\rho S\partial_\sigma S) = 0 \ , \tag{2.22}$$

so that this defines a null geodesic congruence.

In particular, whenever the Hamilton-Jacobi equation can be separated (this includes all space-times investigated in this paper) the null geodesic equations become first order and the natural null geodesic congruence is parameterised by the integration constants of these first order equations.

For a geodesic congruence defined by a solution to the Hamilton-Jacobi equation, the equation for B_{ab} (2.13), is

$$B_{ab} = E^\mu_a E^\nu_b \nabla_\mu\partial_\nu S \tag{2.23}$$

and the equation for the trace of B, (2.15), is

$$B^a{}_a = \nabla^\mu\partial_\mu S \ . \tag{2.24}$$

Therefore B is the covariant Hessian of the HJ function S evaluated in a parallel frame and the trace of B is the Laplacian of the Hamilton-Jacobi function with respect to the space-time metric. Since B is a symmetric matrix, the corresponding null geodesic congruence is twist free.

2.3 The Penrose Limits of a Static Spherically Symmetric Metric

To illustrate the geodesic deviation approach to Penrose limits, and as a preparation for the calculations of sections 3 and 4, we now show how to quickly determine all the Penrose limits of a static spherically symmetric metric. We start with the metric in Schwarzschild-like coordinates (the extension to isotropic coordinates, brane-like metrics

with extended world volumes, or null metrics is straightforward and is discussed in Appendix B),

$$\begin{aligned} ds^2 &= -f(r)dt^2 + g(r)dr^2 + r^2 d\Omega_d^2 \\ d\Omega_d^2 &= d\theta^2 + \sin^2\theta d\Omega_{d-1}^2 \ . \end{aligned} \tag{2.25}$$

Taking the Penrose limit entails first choosing a null geodesic. Because of the rotational symmetry in the transverse direction, without loss of generality we can choose the null geodesic to lie in the (t, r, θ)-plane. The symmetries reduce the geodesic equations to the first integrals

$$\begin{aligned} \dot{t} &= E/f(r) \\ \dot{\theta} &= L/r^2 \\ \dot{r}^2 &= E^2/f(r)g(r) - L^2/g(r)r^2 \ , \end{aligned} \tag{2.26}$$

where E and L are the conserved energy and angular momentum respectively. This defines a natural geodesic congruence, corresponding to the Hamilton-Jacobi function

$$S = -Et + L\theta + R(r) \tag{2.27}$$

with

$$(\frac{d}{dr}R)^2 = gf^{-1}E^2 - r^{-2}gL^2 \tag{2.28}$$

and allows us to calculate B_{ab}.

We first construct the parallel frame. We have

$$E_+ = \dot{r}\partial_r + \dot{t}\partial_t + \dot{\theta}\partial_\theta \ , \qquad E_+|_\gamma = \partial_u \ , \tag{2.29}$$

and we will not need to be more specific about E_-. The transverse components are $E_a = (E_1, E_{\hat{a}})$, with $\hat{a} = 2, \ldots, d$ referring to the transverse $(d-1)$-sphere. Since there is no evolution in these directions, the $E_{\hat{a}}$ are the obvious parallel frame components

$$E_{\hat{a}} = \frac{1}{r\sin\theta} e_{\hat{a}} \tag{2.30}$$

with $e_{\hat{a}}$ an orthonormal coframe for $d\Omega_{d-1}^2$. The transverse $SO(d)$-symmetry implies

$$\begin{aligned} B_{1\hat{a}} &= A_{1\hat{a}} = 0 \\ B_{\hat{a}\hat{b}}(u) &= B(u)\delta_{\hat{a}\hat{b}} \\ A_{\hat{a}\hat{b}}(u) &= A(u)\delta_{\hat{a}\hat{b}} \ . \end{aligned} \tag{2.31}$$

Moreover, because of (2.15) we have

$$B_{11}(u) = \nabla_\mu \dot{x}^\mu(u) - (d-1)B(u) \tag{2.32}$$

so that we only have to calculate $B_{22}(u) = B(u)$, for which one finds (with, say, $e_2 = \partial_\phi$)

$$B_{22} = \Gamma^{\phi}_{\phi r}\dot{r} + \Gamma^{\phi}_{\phi\theta}\dot{\theta} = \partial_u \log(r(u)\sin\theta(u)) \ , \tag{2.33}$$

or

$$B_{\hat{a}\hat{b}}(u) = \delta_{\hat{a}\hat{b}}\partial_u \log(r(u)\sin\theta(u)) \ . \tag{2.34}$$

Since

$$\mathrm{tr}\, B = \partial_u \log\left(\dot{r} r^d \sin^{d-1}\theta\sqrt{f(r)g(r)}\right) \tag{2.35}$$

one finds

$$B_{11}(u) = \partial_u \log\left(r(u)\dot{r}(u)\sqrt{f(r(u))g(r(u))}\right) \ . \tag{2.36}$$

Now, in general, for $B_{ab}(u)$ of the logarithmic derivative form

$$B_{ab}(u) = \delta_{ab}\partial_u \log K_a(u) \tag{2.37}$$

one has

$$A_{ab}(u) = \delta_{ab} K_a(u)^{-1}\partial_u^2 K_a(u) \tag{2.38}$$

and therefore

$$\begin{aligned} A_{11} &= (r\dot{r}\sqrt{fg})^{-1}\partial_u^2(r\dot{r}\sqrt{fg}) \\ A_{\hat{a}\hat{b}} &= \delta_{\hat{a}\hat{b}}(r\sin\theta)^{-1}\partial_u^2(r\sin\theta) \ . \end{aligned} \tag{2.39}$$

In particular, for the transverse components one has the universal result

$$A_{\hat{a}\hat{b}}(u) = \delta_{\hat{a}\hat{b}}\left(\frac{\ddot{r}(u)}{r(u)} - \frac{L^2}{r(u)^4}\right) \ . \tag{2.40}$$

3 Examples

3.1 Schwarzschild Plane Waves and their Homogeneous Near-Singularity Limits

As a concrete example we will now consider the Penrose limits of the $D = (d+2)$-dimensional Schwarzschild metric[1]

$$ds^2 = -f(r)dt^2 + f(r)^{-1}dr^2 + r^2 d\Omega_d^2 \tag{3.1}$$

[1]The Penrose limit for certain special (radial $L = 0$) null geodesics in the AdS-Schwarzschild metric has been discussed before e.g. in [21, 22]. The general case, using the Hamilton-Jacobi method to construct adapted coordinates, was presented in [16]. For a general discussion of limits of the Schwarzschild metric not depending on additional parameters like L see [23].

where

$$f(r) = 1 - \frac{2m}{r^{d-1}} \quad . \tag{3.2}$$

We are assuming that $D \geq 4$ and note that evidently only for $D = 4$ is m the ADM mass of the black hole.

In this case we have

$$\dot{r}^2 = E^2 - L^2 f(r) r^{-2} \equiv E^2 - 2V_{eff}(r) \quad , \tag{3.3}$$

where $V_{eff}(r)$ is the usual effective potential, with respect to which $r(u)$ satisfies the Newtonian equation of motion

$$\ddot{r} = -V'_{eff}(r) \quad . \tag{3.4}$$

It follows that

$$\begin{aligned} A_{22}(u) = \ldots = A_{dd}(u) &= \frac{\ddot{r}(u)}{r(u)} - \frac{L^2}{r(u)^4} \\ &= -\frac{(d+1)mL^2}{r(u)^{d+3}} \quad , \end{aligned} \tag{3.5}$$

where $r(u)$ is the solution to the geodesic (effective potential) equation (3.3). Moreover, since the Schwarzschild metric is a vacuum solution, this is a vacuum plane wave with $\mathrm{Tr}\, A(u) = \delta^{ab} A_{ab}(u) = 0$, so that

$$A_{11}(u) = \frac{(d+1)(d-1)mL^2}{r(u)^{d+3}} \quad . \tag{3.6}$$

There are a number of facts that can be readily deduced from this result:

- First of all, we see that the Penrose limit of the Schwarzschild metric is flat for radial null geodesics, $L = 0$. We could have anticipated this on general grounds because in this case the setting is $SO(d+1)$-invariant, implying $A_{ab}(u) \sim \delta_{ab}$, which is incompatible with $\mathrm{Tr}\, A = 0$ unless $A_{ab}(u) = 0$. This should, however, not be interpreted as saying that the radial Penrose limit of the Schwarzschild metric is Minkowski space. Rather, the space-time "ends" at the value of u at which $r(u) = 0$, say at $u = 0$. Perhaps the best way of thinking of this metric is as a time-dependent orbifold of the kind studied recently in the context of string cosmology (see e.g. [24] and references therein).

- We also learn that the Penrose limit is a symmetric plane wave (u-independent wave profile) if $r(u) = r_*$ is a null geodesic at constant r. Setting $\ddot{r} = \dot{r} = 0$, one finds that

$$r_*^{d-1} = (d+1)m \tag{3.7}$$

(the familiar $r = 3m$ photon orbit for $D = 4$), with the constraint

$$r_*^2 = \frac{d-1}{d+1}\frac{L^2}{E^2} \tag{3.8}$$

on the ratio L/E. Precisely because they lead to symmetric plane waves, with a well-understood string theory quantisation, such constant r Penrose limits have attracted some interest in the literature.

- Moreover we see that the resulting plane wave metric for $L \neq 0$ is singular iff the original null geodesic runs into the singularity, which will happen for sufficiently small values of L/E.

We will now take a closer look at the u-dependence of the wave profile near the singularity $r(u) = 0$. We thus consider sufficiently small values of L/E in order to avoid the angular momentum barrier.

For small values of r, the dominant term in the differential equation (3.3) for r is (unless $L = 0$, a case we already dealt with above)

$$\dot{r} = \sqrt{2m} L r^{-(d+1)/2} \quad . \tag{3.9}$$

This implies that

$$r(u)^{d+3} = \frac{mL^2(d+3)^2}{2} u^2 \quad . \tag{3.10}$$

Thus the behaviour of the Penrose limit of the Schwarzschild metric as $r \to 0$ is

$$A_{11}(u) = -\omega_{SS}'^2(d) u^{-2} \tag{3.11}$$

and

$$A_{22}(u) = \ldots = A_{dd}(u) = -\omega_{SS}^2(d) u^{-2}, \tag{3.12}$$

with frequencies

$$\omega_{SS}'^2(d) = -\frac{2(d^2-1)}{(d+3)^2} \quad . \tag{3.13}$$

and

$$\omega_{SS}^2(d) = \frac{2(d+1)}{(d+3)^2} \quad . \tag{3.14}$$

We note the following:

- First of all, in this limit one finds a singular homogeneous plane wave of the type (1.3). As we will see later, this scale invariance of the near-singularity Penrose limit can be attributed to the power-law scaling behaviour of the near-singularity Schwarzschild metric.

- Moreover, the dependence on L and m has dropped out. The metric thus exhibits a universal behaviour near the singularity which depends only on the space-time dimension $D = d+2$, but neither on the mass of the black hole nor on the angular momentum of the null geodesic used to approach the singularity. For example, for $D = 4$ one has

$$\omega_{SS}^2(d=2) = \frac{6}{25} \quad . \tag{3.15}$$

- The frequencies are bounded by

$$\omega_{SS}'^2(d) < 0 < \omega_{SS}^2(d) < \frac{1}{4} \quad . \tag{3.16}$$

- Finally, we note that the above result is also valid for (A)dS black holes since the presence of a cosmological constant is irrelevant close to the singularity.

3.2 FRW Plane Waves and their Homogeneous Near-Singularity Limits

As another example we consider the Penrose limit of the $D = (n+1)$-dimensional FRW metric

$$ds^2 = -dt^2 + a(t)^2(dr^2 + f_k(r)^2 d\Omega_{n-1}^2) \quad , \tag{3.17}$$

where $f_k(r) = r, \sin r, \sinh r$ for $k = 0, +1, -1$ respectively.

Since the spatial slices are maximally symmetric, up to isometries there is a unique null geodesic and hence a unique Penrose limit. So without loss of generality we shall consider null geodesics which have vanishing angular momentum on the transverse sphere.

Then, with a suitable scaling of the affine parameter, the null geodesic equations can be written as

$$\frac{d}{du}t(u) = \pm a(t(u))^{-1} \quad , \qquad \frac{d}{du}r(u) = a(t(u))^{-2} \tag{3.18}$$

(and in what follows, we choose the upper sign in the first equation). Thus

$$E_+ = \partial_u = a^{-1}\partial_t + a^{-2}\partial_r \quad , \tag{3.19}$$

and this can be extended to a parallel pseudo-orthonormal frame by

$$\begin{aligned} E_- &= \frac{1}{2}(-a\partial_t + \partial_r) \\ E_a &= (af_k)^{-1}\hat{e}_a \quad , \end{aligned} \tag{3.20}$$

where $\hat{e}_a$ is an orthonormal frame for $d\Omega_d^2$, $d = n-1$.

The transverse rotational symmetry implies that $B_{ab}(u) = B(u)\delta_{ab}$ and $A_{ab}(u) = A(u)\delta_{ab}$. Therefore, to determine $B(u)$ it suffices to compute the trace of $B_{ab}(u)$,

$$\operatorname{tr} B = \partial_u \log\left(a^{n-1} f_k^{n-1}\right) \quad , \tag{3.21}$$

implying

$$B(u) = \partial_u \log(a f_k) \quad . \tag{3.22}$$

Using $\frac{d^2}{dr^2} f_k = -k f_k$, one finds

$$A_{ab}(u) = \delta_{ab} A(u) = \delta_{ab} \left(\frac{\ddot{a}(u)}{a(u)} - \frac{k}{a(u)^4} \right) \quad . \tag{3.23}$$

This is the precise analogue of the expression (2.40) obtained in the static spherically symmetric case, the spatial curvature k now playing the role of the angular momentum L^2.

This can now be rewritten in a variety of ways to obtain insight into the properties of this FRW plane wave. For example, writing this in terms of t-derivatives (in order to make use of the Friedmann equations), we find

$$A(u(t)) = \frac{1}{a(t)^2} (\frac{a''(t)}{a(t)} - \frac{k + a'(t)^2}{a(t)^2}) \quad . \tag{3.24}$$

where $a(t)$ is determined by the Einstein (Friedmann) equations, $u(t)$ by $du = a(t)dt$, and $a' = \frac{d}{dt} a$. The Friedmann equations

$$\begin{aligned} \frac{a'(t)^2 + k}{a(t)^2} &= \frac{16\pi G}{n(n-1)} \rho(t) \\ \frac{a''(t)}{a(t)} &= -\frac{8\pi G}{n(n-1)} [(n-2)\rho(t) + nP(t)] \quad , \end{aligned} \tag{3.25}$$

imply

$$\frac{a'(t)^2 + k}{a(t)^2} - \frac{a''(t)}{a(t)} = \frac{8\pi G}{(n-1)} [\rho(t) + P(t)] \quad , \tag{3.26}$$

so that one finds that the wave profile of the FRW plane wave can be written compactly as

$$A(u) = -\frac{8\pi G}{n-1} \frac{\rho(u) + P(u)}{a(u)^2} \quad . \tag{3.27}$$

One immediate consequence is that the Penrose limit is flat if and only if $\rho + P = 0$, corresponding to having as the only matter content a cosmological constant. This is in agreement with the result [8] that every Penrose limit of a maximally symmetric space-time is flat.

We will now study the behaviour of $A(u)$ near a singularity, and to be specific we choose the usual equation of state

$$P(t) = w\rho(t) \quad . \tag{3.28}$$

We consider $w > -1$ ($w = -1$ would correspond to the case $\rho + P = 0$ already dealt with above) and introduce the positive parameter

$$h(n, w) = \frac{2}{n(1+w)} \tag{3.29}$$

and the positive constant (constant by the continuity equation for ρ)

$$C_h = \frac{16\pi G}{n(n-1)}\rho(t)a(t)^{2/h} \quad , \tag{3.30}$$

in terms of which the Friedmann equations read

$$a'(t)^2 = C_h a(t)^{(2h-2)/h} - k \tag{3.31}$$

$$a''(t) = \tfrac{h-1}{h} C_h a(t)^{(h-2)/h} \quad . \tag{3.32}$$

Thus the universe is decelerating for $0 < h < 1$ and accelerating for $h > 1$, the critical case $h = 1$ corresponding to $w_c = -1 + 2/n$ (the familiar dark energy threshold $w_c = -1/3$ for $n = 3$).

We first consider the case $k = 0$. In that case one has

$$a(t) \sim t^h \quad , \tag{3.33}$$

and therefore

$$a(u) \sim u^{h/h+1} \quad . \tag{3.34}$$

It then follows immediately from (3.23) that, more explicitly, the u-dependence of $A(u)$ is[2]

$$A(u) = -\omega^2_{FRW}(h, k = 0)u^{-2} \quad , \tag{3.35}$$

where

$$\omega^2_{FRW}(h, k = 0) = \frac{h}{(1+h)^2} \quad . \tag{3.36}$$

We see that the Penrose limit of a spatially flat FRW universe with equation of state $P = w\rho$ is exactly a singular homogeneous plane wave of the type (1.3).

The frequency square $\omega^2_{FRW}(h, k = 0)$ has the following properties:

- Since

  $$\omega^2_{FRW}(h, k = 0) = \omega^2_{FRW}(1/h, k = 0) \quad , \tag{3.37}$$

  for every accelerating (inflating) solution of the $k = 0$ Friedmann equations there is precisely one decelerating solution with the same Penrose limit. The self-dual point $h = 1$ corresponds to the linear time-evolution $a(t) \sim t$.

- The frequency squares are again bounded by

  $$\omega^2_{FRW}(h, k = 0) \leq \frac{1}{4} \quad , \tag{3.38}$$

  with equality attained for $h = 1$.

[2] This generalises the result reported in [8].

- Curiously, the frequencies obtained in the Penrose limit of the Schwarzschild metric (in all but one of the directions) are precisely those of a dust-filled FRW universe, $P = w = 0$, of the same dimension $n = d + 1$,

$$\omega_{SS}^2(d) = \omega_{FRW}^2(h, k = 0) \ , \tag{3.39}$$

  e.g. $6/25$ for $n = 3$.

It is clear that for $k = 0$, when only the first term in (3.23) is present, this homogeneous u^{-2}-behaviour is a consequence of the exact power-law behaviour of $a(t)$ and hence $a(u)$. Let us now consider what happens for $k \neq 0$, when there is a competition between the two terms in (3.23) as one approaches the singularity.

One might like to argue that, even for $k \neq 0$, one finds the same behaviour provided that the matter term dominates over the curvature term in the Friedmann equation (3.31) as $a \to 0$. This happens for $0 < h < 1$, and this argument is correct as one can also see that in this range the first term in (3.23), proportional to u^{-2}, indeed dominates over the second (curvature) term which (cf. (3.34)) is proportional to $u^{-4h/(h+1)}$. Thus for $0 < h < 1$ the near-singularity limit of the FRW plane wave is a homogeneous plane wave with k-independent frequencies (3.36),

$$0 < h < 1: \quad \omega_{FRW}^2(h, k) = \omega_{FRW}^2(h, k = 0) = \frac{h}{(1+h)^2} \ . \tag{3.40}$$

Now let us look at what happens as one passes from a decelerating to a critical ($h = 1$) and then accelerating ($h > 1$) universe. First of all, for $h = 1$, both terms on the right hand side of the Friedmann equation (3.31) contribute equally (they are constant), and correspondingly both terms in (3.23) are proportional to u^{-2}. Thus one finds a homogeneous plane wave, but with a curvature-induced shift of the frequency,

$$h = 1: \quad \omega_{FRW}^2(h = 1, k) = \omega_{FRW}^2(h = 1, k = 0) + kc^2 = \frac{1}{4} + kc^2 \tag{3.41}$$

for some constant c. In particular, in the spatially closed case $k = +1$ (this requires $C_h > 1$), one now finds frequency squares that are larger than $1/4$. This is a borderline behaviour in the sense that, as can easily be seen from (3.31), the initial singularity for $k = +1$ ceases to exist for $h > 1$.

It thus remains to discuss the case $k = -1$ and $h > 1$. Given the previous discussion, one might be tempted to think that now the second term in (3.23) will dominate over the first, leading to a non-homogeneous and more singular $u^{-4h/(h+1)}$-behaviour. This is, however, not the case, as (3.34) now represents the leading behaviour at large $a(u)$. At small $a(u)$, the leading behaviour is, exactly as for $h = 1$, determined by the constant

curvature term in (3.31). Thus even in this case one finds a singular homogeneous plane wave, with frequency

$$h > 1: \quad \omega^2_{FRW}(h, k = -1) = \frac{1}{4} - c^2 \tag{3.42}$$

once again bounded from above by 1/4.

4 The Universality of Penrose Limits of Power-Law Type Singularities

In the previous section we have presented some evidence for a remarkable

> **Conjecture:** Penrose limits of physically reasonable space-time singularities are singular homogeneous plane waves with wave profile $A_{ab}(u) \sim u^{-2}$.

In this section we will show how to prove this conjecture for a very large class of physical singularities of spherically symmetric type. We will in the process also see some examples of "extreme" stress-energy tensors that give rise to a different behaviour.

4.1 Szekeres-Iyer Metrics

The homogeneity of the Penrose limit (geodesic deviation) that we have found in the above examples appears to reflect a power-law scaling behaviour of the metric near the singularity. Thus to assess the generality of this kind of result, one needs to enquire about the generality of space-time singularities exhibiting such a power-law behaviour.

In [17] (see also [18]), in the context of investigations of the Cosmic Censorship Hypothesis, Szekeres and Iyer studied a large class of four-dimensional spherically symmetric metrics they dubbed "metrics with power-law type singularities". Such metrics encompass practically all known singular spherically symmetric solutions of the Einstein equations, in particular all the FRW metrics, Lemaître-Tolman-Bondi dust solutions, cosmological singularities of the Lifshitz-Khalatnikov type, as well as other types of metrics with null singularities.

In "double-null form", these metrics (in $d+2$ dimensions) take the form

$$ds^2 = -\mathrm{e}^{A(U,V)} dU dV + \mathrm{e}^{B(U,V)} d\Omega_d^2 \ , \tag{4.1}$$

where $A(U,V)$ and $B(U,V)$ have expansions

$$\begin{aligned} A(U,V) &= p \ln x(U,V) + \text{regular terms} \\ B(U,V) &= q \ln x(U,V) + \text{regular terms} \end{aligned} \tag{4.2}$$

near the singularity surface $x(U,V)=0$.

Generically, the residual coordinate transformations $U \to U'(U)$, $V \to V'(V)$ preserving the form of the metric (4.1) can be used to make $x(U,V)$ linear in U and V,

$$x(U,V) = kU + lV \quad , \qquad k,l = \pm 1, 0 \quad , \tag{4.3}$$

with $\eta = kl = 1, 0, -1$ corresponding to spacelike, null and timelike singularities respectively. This choice of gauge essentially fixes the coordinates uniquely, and thus the "critical exponents" p and q contain diffeomorphism invariant information.

The Schwarzschild metric, for example, has $p = (1-d)/d$ and $q = 2/d$, as is readily seen by starting with the metric in Eddington-Finkelstein or Kruskal-Szekeres coordinates and transforming to the Szekeres-Iyer gauge. Alternatively, if one is just interested in the leading behaviour of the metric, one can simply expand the metric near $r = 0$ and then go to tortoise-coordinates.

We will focus on the behaviour of these geometries near the singularity at $x = 0$, where the metric is

$$ds^2 = -x^p dU dV + x^q d\Omega_d^2 \quad . \tag{4.4}$$

For generic situations this leading behaviour is sufficient to discuss the physics near the singularity. In certain special cases, for particular values of p, q or for null singularities, this leading behaviour cancels in certain components of the Einstein tensor and the subleading terms in the above metric become important for a full analysis of the singularities [17, 18]. The analysis then becomes more subtle and we will not discuss these cases here. In the following we will consider exclusively the metric (4.4) which, for $\eta \neq 0$ and generic values of p and q, captures the dominant behaviour of the physics near the singularity.

For $\eta \neq 0$ we define $y = kU - lV$ and choose $k = \eta l = 1$. Then the metric takes the form

$$ds^2 = \eta x^p dy^2 - \eta x^p dx^2 + x^q d\Omega_d^2 \quad . \tag{4.5}$$

With the further definition $r = x^{q/2}$ (for $q \neq 0$), this has the standard form of a spherically symmetric metric. We will come back to this below in order to be able to make direct use of the analysis of section 2.3.

For $\eta = 0$, on the other hand, we choose $x = U$, $y = -V$, so that the metric is

$$ds^2 = x^p dx dy + x^q d\Omega_d^2 \quad , \tag{4.6}$$

which has the form of the spherically symmetric null metrics analysed in Appendix B.

4.2 Null Geodesics of Szekeres-Iyer Metrics

In terms of the conserved momenta P and L associated with y and, say, the colatitude θ of the d-sphere,

$$d\Omega_d^2 = d\theta^2 + \sin^2\theta d\Omega_{d-1}^2 \quad , \tag{4.7}$$

in particular

$$x^q\dot{\theta} = L \quad , \tag{4.8}$$

the null geodesic condition (for any η) is equivalent to

$$\dot{x}^2 = P^2 x^{-2p} + \eta L^2 x^{-p-q} \quad , \tag{4.9}$$

To understand the null geodesics near $x = 0$, we begin by extracting as much information as possible from this equation, recalling that due to the expansion around $x = 0$ we can only trust the leading behaviour of this equation as $x \to 0$.

Unless $p = q$, one of the two terms on the right-hand-side of (4.9) will dominate as $x \to 0$, and thus the generic behaviour of a null geodesic near $x = 0$ is identical to that of a geodesic with either $L = 0$ or $P = 0$. In the former case, one finds

$$\text{Behaviour 1:} \qquad x(u) \sim u^{1/(p+1)} \tag{4.10}$$

unless $p = -1$ when $x(u) \sim \exp u$. We are only interested in those geodesics which run into the singularity at $x = 0$ at finite u. This happens only for $p > -1$. In the latter case, corresponding to null geodesics which asymptotically, as $x \to 0$, behave like geodesics with $P = 0$, we evidently need $\eta = +1$ (a spacelike singularity), which leads to

$$\text{Behaviour 2:} \qquad x(u) \sim u^{2/(p+q+2)} \tag{4.11}$$

unless $p + q = -2$ which again leads to an exponential behaviour. These null geodesics run into the singularity at finite u for $p + q > -2$.

For $\eta = +1$, the situation regarding null geodesics that reach the singularity at finite u is summarised in the following table.

Conditions on (P, L)	Constraints on (p, q)	Behaviour
$P \neq 0, L = 0$	$p > -1$	1
$P = 0, L \neq 0$	$p + q > -2$	2
$P \neq 0, L \neq 0$	$p > q, p > -1$	1
$P \neq 0, L \neq 0$	$p < q, p + q > -2$	2
$P \neq 0, L \neq 0$	$p = q > -1$	$1 = 2$

(4.12)

For $\eta = -1$, the situation is largely analogous, the main difference being that now the second term in (4.9) acts as an angular momentum barrier preventing e.g. geodesics with $L \neq 0$ for $q > p$ from reaching the singularity at $x = 0$. These cases are indicated by a '$-$' in the table below. For the same reason, for $p = q$ one finds the constraint $|P| > |L|$.

Conditions on (P, L)	Constraints on (p, q)	Behaviour
$P \neq 0, L = 0$	$p > -1$	1
$P = 0, L \neq 0$		$-$
$P \neq 0, L \neq 0$	$p > q, p > -1$	1
$P \neq 0, L \neq 0$	$p < q$	$-$
$\|P\| > \|L\|$	$p = q > -1$	$1 = 2$

(4.13)

Finally, for $\eta = 0$ we find Behaviour 1 for all values of p and q, with the corresponding constraint $p > -1$.

4.3 Penrose Limits of Power-Law Type Singularities

We will now determine the Penrose limits of the Szekeres-Iyer metrics along the null geodesics reaching the singularity $x = 0$ at finite u.

For $\eta \neq 0$ we notice that the metric is simply a special case of a spherically symmetric metric and thus can be treated using the analysis of section 2.3. Indeed, with $t = y$ and $r = x^{q/2}$ $(q \neq 0)$, the metric (4.5) takes the form

$$ds^2 = \eta x^p dy^2 - \eta x^p dx^2 + x^q d\Omega^2 \tag{4.14}$$

$$= \eta r^{2p/q} dt^2 - \frac{4\eta}{q^2} r^{2(p-q+2)/q} dr^2 + r^2 d\Omega^2 \tag{4.15}$$

where in the second line the notation of t and r is adapted to the case of $\eta = -1$ where the singularity is timelike and t is time. We will continue to use this notation even for spacelike singularities where t is actually spacelike.

The case $q = 0$ is special, but actually corresponds to a shell crossing singularity [17] which is usually not considered to be a true singularity as the transverse sphere is of constant radius $x^q = 1$. Such singularities arise for instance for certain collisions of spherical dust shells. From here on we will only discuss $q \neq 0$.

Referring to section 2.3 where such a spherically symmetric metric was treated, we can identify

$$f(r) = -\eta r^{2p/q} \tag{4.16}$$

$$g(r) = -\frac{4\eta}{q^2} r^{2(p-q+2)/q}. \tag{4.17}$$

We can now appeal to (2.36, 2.34) to deduce that

$$B_{ab} = \delta_{ab}\partial_u \log(K_a(u)) \tag{4.18}$$

with

$$\begin{aligned} K_1(u) &= \dot{r}(u) r(u)^{2(p+1)/q} \\ K_2(u) &= r(u)\sin(\theta(u)) \end{aligned} \tag{4.19}$$

As shown in Appendix B, it is straightforward to extend this analysis to the case of null singularities, $\eta = 0$, with the result that the expressions for $K_a(u)$ are identical to those given for $\eta = \pm 1$ in (4.19). We can thus treat all three cases simultaneously.

It follows from the analysis of the previous section that the only possibility of interest for $r(u) = x(u)^{q/2}$ is the power-law behaviour

$$r(u) = u^a \ , \tag{4.20}$$

with

$$\text{Behaviour 1:} \quad p > -1 \quad a = q/2(p+1) \tag{4.21}$$

$$\text{Behaviour 2:} \quad p + q > -2 \quad a = q/(p+q+2) \ . \tag{4.22}$$

Clearly, then, $K_1(u)$ is also a simple power of u. Specifically one has (since we are interested in the logarithmic derivatives of $K_1(u)$, proportionality factors are irrelevant)

$$\begin{aligned} &\text{Behaviour 1:} \quad K_1(u) \sim r(u) \\ &\text{Behaviour 2:} \quad K_1(u) \sim r(u)^{p/q} \ . \end{aligned} \tag{4.23}$$

Thus the corresponding component of $A_{ab}(u)$ is

$$\begin{aligned} &\text{Behaviour 1:} \quad A_{11}(u) = \frac{\ddot{K}_1(u)}{K_1(u)} = a(a-1)u^{-2} \\ &\text{Behaviour 2:} \quad A_{11}(u) = \frac{\ddot{K}_1(u)}{K_1(u)} = pa/q(pa/q-1)u^{-2} \ . \end{aligned} \tag{4.24}$$

and the Penrose limit behaves as a singular homogeneous plane wave in this direction. Since $b(b-1)$ has a minimum $-1/4$ at $b = 1/2$, this leads to the bound

$$\omega_1^2 \leq \frac{1}{4} \ . \tag{4.25}$$

This is the same range that we found empirically for both the Schwarzschild and FRW plane waves near the singularity.

The behaviour of A_{22} is more subtle due to the dependence of $K_2(u)$ on $\sin\theta(u)$. The general behaviour is as in (2.40), namely

$$A_{22}(u) = \frac{\ddot{r}(u)}{r(u)} - \frac{L^2}{r(u)^4} \quad . \tag{4.26}$$

With the power-law behaviour $r(u) = u^a$, the first term is always proportional to u^{-2}. This term is dominant as $u \to 0$ when $a < 1/2$, while it is the second term that dominates for $a > 1/2$ (and leads to a strongly singular plane wave with profile $\sim u^{-4a}$). In the special case $a = 1/2$, both terms are proportional to u^{-2}. Thus one has, for $L \neq 0$,

$$r(u) = u^a \quad a < \tfrac{1}{2}: \quad A_{22}(u) \to -\omega_2^2 u^{-2} \quad , \qquad \omega_2^2 = a(1-a) < \frac{1}{4} \tag{4.27}$$

$$a = \tfrac{1}{2}: \quad A_{22}(u) \to -\omega_2^2 u^{-2} \quad , \qquad \omega_2^2 = \frac{1}{4} + L^2 \geq \frac{1}{4} \tag{4.28}$$

$$a > \tfrac{1}{2}: \quad A_{22}(u) \to -L^2 u^{-4a} \quad . \tag{4.29}$$

When $\eta = 0$, Behaviour 1 arises in the entire p-q plane. Thus $\omega_1^2 \leq 1/4$ and a can take any of the three values above with the special value $a = 1/2$ corresponding to the line $q = p + 1$. When $p \geq q$ and $\eta \neq 0$, $a = q/2(p+1)$ and thus always $a < 1/2$. On the other hand, when $p < q$ and $\eta = 1$ we see that $a = q/(p+q+2)$ can take on any value, with $a = 1/2$ along the line $q = p + 2$ and $a > 1/2$ for $q > p + 2$. When $p < q$ and $\eta = -1$ we cannot reach the singularity along a geodesic with $L \neq 0$.

When $L = 0$, only the first term in (4.26) is present, and one thus finds (4.27) for all values of a. Since $L = 0$ implies Behaviour 1, this means $a = q/2(p+1)$. Along the special line $q = 2(p+1)$ one has $a = 1$ and one finds the "flat" Penrose limit $A_{11}(u) = A_{22}(u) = 0$. In particular, this happens for radial null geodesics in the Schwarzschild metric ($p = (1-d)/d$ and $q = 2/d$), as already noticed in section 3.1.

These results are summarised in Figure (1a) for $\eta = 1$ and in Figure (1b) for $\eta = -1$.

4.4 The Role of the Dominant Energy Condition

We thus see that while we frequently obtain a singular HPW with $\omega_a^2 \leq 1/4$ in the Penrose limit, other possibilities do arise. For timelike singularities, the situation is clear:

> Penrose Limits of timelike spherically symmetric singularities of power-law type are singular HPWs with frequency squares bounded from above by 1/4.

We will now show that for spacelike singularities a different behaviour can occur only when the strict Dominant Energy Condition (DEC) is violated, in particular, that the

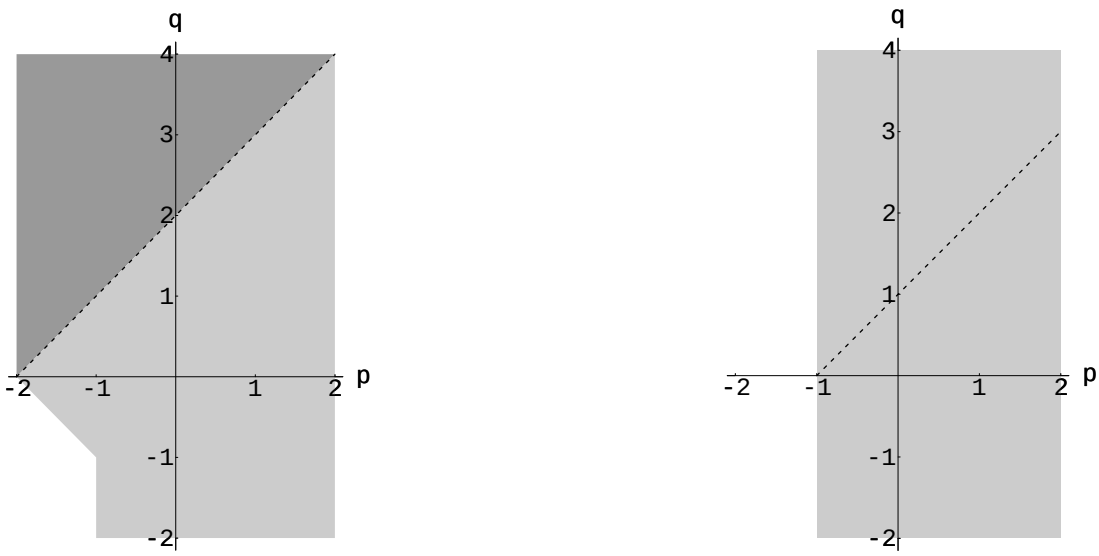

Figure 1: The Penrose Limit Phase Diagram in the $p-q$ plane for (a) spacelike ($\eta = +1$) and (b) timelike ($\eta = -1$) singularities. Singular HPWs arise in the light-shaded regions whereas in the dark-shaded region there are Penrose limits leading to strongly singular (and non-homogeneous) plane waves. (a) The diagram is bounded on the left by the lines $p = -1$ and $p + q = -2$. The dashed line $a = 1/2 \Leftrightarrow q = p + 2$ separates the two regions, and only along that line one finds singular HPWs with $\omega_2^2 > 1/4$. (b) For $\eta = -1$, one finds singular HPWs with $\omega_2^2 \leq 1/4$ for all (p, q) with $p > -1$, $\omega_2^2 = 1/4$ arising only along the dashed line $a = 1/2$ for zero angular momentum, $L = 0$.

strongly singular region (the dark-shaded region in Figure (1a)) is excluded by the requirement that the DEC be satisfied but not saturated.

We begin by recalling the definition of the *Dominant Energy Condition* on the stress-energy tensor T^μ_ν (or Einstein tensor G^μ_ν) [10]: for every timelike vector v^μ, $T_{\mu\nu}v^\mu v^\nu \geq 0$, and $T^\mu_\nu v^\nu$ is a non-spacelike vector. This may be interpreted as saying that for any observer the local energy density is non-negative and the energy flux causal.

Next we recall that a stress-energy tensor is said to be of type I [10] if T^μ_ν has one timelike and three (more generally, $d+1$) spacelike eigenvectors. The corresponding eigenvalues are $-\rho$ (ρ the energy density) and the principal pressures P_α, $\alpha = 1, \ldots, d+1$. For a stress-energy tensor of type I, the DEC is equivalent to

$$\rho \geq |P_\alpha| \quad . \tag{4.30}$$

We say that the *strict* DEC is satisfied if these are strict inequalities and we will see that the "extremal" matter content (or equation of state) for which at least one of the inequalities is saturated will play a special role in the following.

The Einstein tensor of the metric (4.5) is diagonal (Appendix C),

$$\begin{aligned} G^x_x &= -\tfrac{1}{2}d(d-1)x^{-q} - \tfrac{1}{8}\eta dq((d-1)q+2p)x^{-(p+2)} \\ G^y_y &= -\tfrac{1}{2}d(d-1)x^{-q} + \tfrac{1}{8}\eta dq(2p+4-(d+1)q)x^{-(p+2)} \\ G^i_j &= -\tfrac{1}{2}(d-1)(d-2)\delta^i_j x^{-q} + \tfrac{1}{8}\eta(4p-4q+4qd-d(d-1)q^2)\delta^i_j x^{-(p+2)} \end{aligned} \tag{4.31}$$

and hence clearly of type I. For spacelike singularities, $\eta = +1$, we have energy density $\rho = -G^x_x$, radial pressure $P_r = G^y_y$ and transverse pressures $P_i = G^i_i$, while for $\eta = -1$ the roles of G^x_x and G^y_y are interchanged.

Since for $q > p+2$ the first term in G^x_x and G^y_y dominates over the second term as $x \to 0$, it is obvious that for $q > p+2$ the relation between ρ and P_r becomes extremal as $x \to 0$,

$$G^x_x - G^y_y \to 0 \quad \Leftrightarrow \quad \rho + P_r \to 0 \quad . \tag{4.32}$$

Put differently, $q \leq p+2$ is a necessary condition for the strict DEC to hold. Since strongly singular plane waves (the dark-shaded region in Figure (1a)) arise only for $q > p+2$, we have thus established that

> Penrose Limits of spacelike spherically symmetric singularities of power-law type satisfying the strict Dominant Energy Condition are singular HPWs.

Since frequency squares exceeding 1/4 can only occur along the line $q = p+2$ itself, we can also conclude that

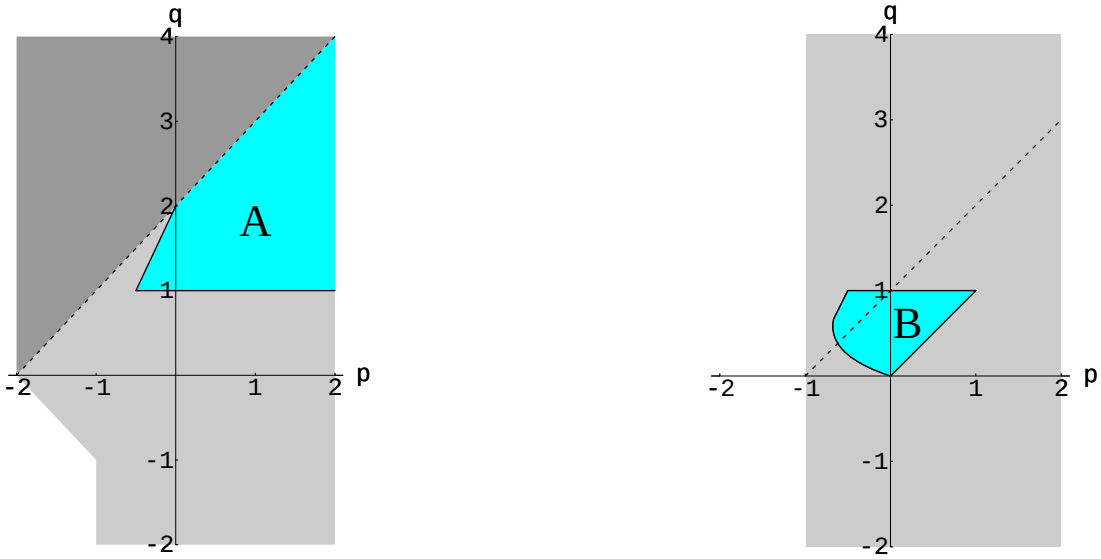

Figure 2: The Penrose Limit + DEC Phase Diagram in the $p-q$ plane for (a) spacelike ($\eta = +1$) and (b) timelike ($\eta = -1$) singularities. In the highlighted regions A and B the DEC is satisfied (but not saturated). (a) the strongly singular (and non-homogeneous) plane waves of the dark-shaded region with extremal equation of state are excluded, and singular HPWs with $\omega_2^2 \geq 1/4$ arise only along the boundary $q = p + 2$ to the extremal equation of state. (b) the Penrose limits are singular HPWs with $\omega_2^2 \leq 1/4$, with $\omega_2^2 = 1/4$ only along the dashed line $q = p + 1$.

> the resulting frequency squares ω_a^2 are bounded from above by $1/4$ unless one is on the border to an extremal equation of state.

A more detailed analysis of the DEC (as performed for $d = 2$ in [17]), shows that the actual region in which the strict DEC is satisfied (taking into account also the conditions involving the transverse pressures P_i), is more constrained. For spacelike singularities, this is the (infinite) region bounded by the lines

$$q = 2/d, \quad q = p + 2, \quad q = 2(p + 1) \quad , \tag{4.33}$$

displayed as the highlighted region A of Figure (2a) (drawn here for $d = 2$). A look at this figure confirms the results we have obtained above.

For timelike singularities, the region where the strong DEC is satisfied is considerably smaller - it is a finite subset of the strip bounded by the lines $q = 0$ and $q = 2/d$, indicated (for $d = 2$) as the highlighted region B of Figure (2b). While of no consequence for the present discussion, the fact that in region B the pressures P_r and P_i

cannot simultaneously be positive plays an important role in the discussion of Cosmic Censorship in [17].

The fact that the Penrose limits of timelike singularities always behave as u^{-2}, while in the spacelike case strongly singular Penrose limits can arise (even though only for metrics violating the strict DEC), might give the impression that timelike (naked) singularities are in some sense better behaved than spacelike (censored) singularities. We believe that this should rather be viewed as an indication that massless particles are inadequate for probing the geometry of timelike singularities since, for large regions in the (p, q)-parameter space, the angular momentum barrier prevents non-radial null geodesics from reaching (and hence probing) the singularity. From this point of view, it is much more significant that for spacelike singularities massless particle probes with arbitrary angular momentum all detect homogeneous singular plane waves provided that the strict DEC is satisfied.

We conclude this section with a comment on the case of null singularities of power-law type ($\eta = 0$) which are analysed in [18]. As mentioned in section 4.1, in this case some of the leading components of the Einstein tensor vanish and hence one (somewhat trivially) ends up with an extremal equation of state. Thus no interesting constraints arise from imposing the DEC, and using only the leading form (4.6) of the metric cannot be the basis for a full analysis which is more subtle and will be left for future work.

5 Discussion

We have shown that space-time singularities exhibit a remarkably universal homogeneous u^{-2}-behaviour in the Penrose Limit. We have established this in complete generality for timelike singularities of power-law type and have also shown that for spacelike singularities of power-law type, for which more singular Penrose limits are possible, this u^{-2}-behaviour is implied by demanding the strict DEC.

Perhaps the main implications of this result are for the study of string theory in singular and/or time-dependent backgrounds. In general, because of the simplifications brought about by the existence of a natural light cone gauge [25], plane wave (and more general pp-wave) backgrounds provide an ideal setting for studying such problems. Now, as we have seen, the Penrose limits of a large class of singularities are always at least as singular as u^{-2}. Thus "weakly singular" plane waves with profile $\sim u^{-\alpha}$, $\alpha < 2$, while perhaps interesting as toy-models of time-dependent backgrounds in string theory [19, 26], do not actually arise as Penrose limits of standard cosmological or other singularities. Moreover, a strongly singular behaviour with $\alpha > 2$ can only arise for metrics violating the strict DEC. This singles out the singular HPWs with profile

$\sim u^{-2}$ as the backgrounds to consider in order to obtain insight into the properties of string theory near physically reasonable space-time singularities.

String theory in precisely this class of backgrounds, and in precisely the frequency range $\omega_a^2 < 1/4$ that we generically find, has already been studied in some detail and shown to be exactly solvable in [14]. The significance of this bound on the frequencies for string theory (also noted in the earlier studies [19]) lies in the fact that the properties of Bessel functions allow for an analytic continuation of string modes through the singularity in this case (due to the standard shift by 1/4 in the Bessel equation).[3] Other aspects of string theory in this class of backgrounds still remain (and deserve) to be explored. In particular, since the Penrose limit can be considered as the origin of a string expansion around the original background [8] (see [28] for an expansion around the Penrose limit of $AdS_5 \times S^5$ [3] in the context of the BMN correspondence [4]), the above observations about the relation of these backgrounds to interesting space-time singularities provide additional impetus for understanding string theory in an expansion around such metrics.

The analysis of the present paper can be generalised in various ways. In particular, even though we have only considered spherically symmetric metrics, the results we have obtained are certainly not restricted to spherical symmetry. A prototypical anisotropic example is the Kasner metric whose Penrose limit (together with those of other anisotropic or inhomogeneous cosmological models) was studied by Kunze [13]. In many of these examples one sees that one once again gets a u^{-2}-behaviour either on the nose (for particular Penrose limits of the Kasner metric) or in the near-singularity limit. It would be interesting to establish a more general result along these lines, in particular also in view of the role played by the Kasner metrics (and Bianchi IX cosmologies) in the BKL discussion of the general solution of Einstein's equations near spacelike singularities [29].

Going beyond spherical symmetry may also shed light on a peculiar feature of the spherically symmetric metrics of power-law type studied in [17, 18] and here. Namely, we have seen that a rather special role is played by the "extremal" equations of state for which at least one of the inequalities in the DEC is saturated. As noted in [17] this type of equation of state is not ruled out by physical considerations alone, and arises "rather too easily" near the spherically symmetric singularities of power law type that we have been considering. Indeed, as we have seen in section 4.4, whenever $q > p + 2$ one obtains an extremal equation of state close to the singularity because then the "extremal" contribution to the curvature from the transverse sphere dominates the longitudinal (radial/time) contribution. Thus this may well be an artefact of spherical

[3] This bound also plays an important role in a related context in the recent article [27] analysing the propagation of scalar fields in space-time singularities, where the role of u is played by the usual tortoise-coordinate r_* of Schwarzschild-like metrics.

symmetry.

We have also not discussed null singularities in detail. To study these may not only be of interest in its own right but also because of the existence of a null counterpart of the BKL solution, a general solution of the Einstein equations describing a null weak singularity [30]. There is now mounting evidence (see e.g. [31, 32]) that these singularities are realised inside realistic rotating black holes, where they are expected to form, as a consequence of the Penrose instability, at the location of what would have been the inner Cauchy horizon of the stationary Kerr metric. These null singularities bear some resemblance to the general rotating singular homogeneous plane waves found in [15], and one might wonder if Penrose limits of singularities inside rotating black holes give rise to these rotating singular homogeneous plane waves in the same way as rotating smooth (Gödel) metrics give rise [33] to the rotating smooth homogeneous plane waves of [15]. For some comments on Penrose limits in this context see [34].

Since string theory is exactly solvable both in the non-rotating u^{-2} singular homogeneous plane wave backgrounds [14] and for the general rotating smooth homogeneous plane wave metrics [35], one also expects string theory in these general homogeneous singular backgrounds to be exactly solvable [35], and it will be interesting to find out if they actually arise from Penrose limits of realistic rotating black holes.

Acknowledgements

This work has been supported by the European Community's Human Potential Programme under contract HPRN-CT-2000-00131 Quantum Spacetime and by the Swiss National Science Foundation. MBl is grateful to the High Energy Group of the Abdus Salam ICTP for hospitality during (what were supposed to be) the final stages of this work, and MBo thanks CONACyT (Mexico).

A Hamilton-Jacobi Equations, Geodesic Congruences and Adapted Coordinates

Even though the Penrose limit itself only refers to a particular null geodesic, the original construction of Penrose limits in terms of adapted coordinates (Penrose coordinates) [6, 8] requires the embedding of this null geodesic into a twist-free null geodesic congruence.

Indeed, in Penrose coordinates (U, V, Y^i), $i = 1, \ldots, d$, the original space-time metric takes the form

$$ds^2 = 2dUdV + a(U, V, Y^k)dV^2 + 2b_i(U, V, Y^k)dVdY^i + g_{ij}(U, V, Y^k)dY^i dY^j \quad , \quad \text{(A.1)}$$

corresponding to the $(d+2)$ coordinate conditions $g_{UU} = g_{UY^k} = 0$, $g_{UV} = 1$. This exhibits the embedding of the original null geodesic $V = Y^k = 0$ into a congruence of null geodesics parametrised by the coordinates V and Y^k, the coordinate U being identified with the affine parameter of the null geodesics in the congruence.

A systematic way of constructing Penrose coordinates makes use of the Hamilton-Jacobi (HJ) function of the null congruence [12, 16]. In this Appendix, we shall explicitly construct the transformation from a general coordinate system to Penrose coordinates.

The essence of the HJ method can be summarised by the observation that the momenta

$$p_\mu = g_{\mu\nu}\frac{dx^\nu}{d\lambda} \tag{A.2}$$

associated with the above null congruence ($\dot{U} = 1, \dot{V} = \dot{Y}^k = 0$) are

$$p_V = 1 \ , \qquad p_U = p_{Y^k} = 0 \ , \tag{A.3}$$

so that, in arbitrary coordinates x^μ, one has

$$p_\mu = \partial_\mu V \ . \tag{A.4}$$

Thus, since the geodesic congruence is null, $g^{\mu\nu}\partial_\mu V \partial_\nu V = 0$, one can identify

$$V(x^\mu) = S(x^\mu) \ . \tag{A.5}$$

with the solution of the Hamilton-Jacobi equation

$$g^{\mu\nu}\partial_\mu S \partial_\nu S = 0 \ . \tag{A.6}$$

corresponding to the null congruence

$$\dot{x}^\mu = g^{\mu\nu}\partial_\nu S \ . \tag{A.7}$$

Conversely (see (2.22)) any solution S of the equations (A.6,A.7) gives rise to a (twist-free) null geodesic congruence and $V = S$ is the corresponding null adapted coordinate.

It thus only remains to understand how to construct the transverse coordinates Y^k. To that end we will now briefly review some facts about solutions to the Hamilton-Jacobi equations (see e.g. [36, 37]).

The general solution to the HJ equation (A.6) can be rather involved but there usually exists a "complete" solution, complete in the sense that it depends on $d+2$ integration constants [36] ($d+2$ as in the rest of the paper is the space-time dimension).[4] For

[4] It is not always guaranteed that such a complete solution exists, though in all the cases that we consider here it does. The most general solution to (A.6) is much more complicated and can be constructed from a complete solution by looking at x-dependent hypersurfaces in the space of integration constants by the method of envelopes [37].

a complete solution to the HJ equation with integration constants α_μ, the associated geodesic congruence is $x^\mu = x^\mu(\lambda, \alpha_\mu, x_0^\mu)$, where x_0^μ are the positions of the geodesics at $\lambda = 0$, $x_0^\mu = x^\mu(0, \alpha_\mu, x_0^\mu)$. The initial value surface parameterised by the x_0^μ is a Cauchy surface for the HJ equation and can be represented algebraically by the equation $F(x^\mu) = 0$. For a well-posed initial value problem, we require that the hypersurface $F = 0$ has an everywhere timelike normal vector $(\partial F)^2 < 0$.

One of the integration constants α_μ simply represents a constant shift of S. Furthermore, the HJ equation is homogeneous of degree two, so if S is a solution, then κS, $\kappa = \text{const} \neq 0$, is also a solution. This scale invariance of the HJ equation is absorbed in the first order geodesic equations, (A.7) by a scale transformation of the affine parameter λ. Therefore, there are only d non-trivial integration constants which we will denote by α_k, $k = 1, \ldots, d$.

Given a particular null geodesic γ, the integration constants α_k can be uniquely fixed. Indeed let $p_\mu^0 = g_{\mu\nu}\dot{x}^\nu|_{\lambda=0}$ be the momentum of the geodesic γ at $\lambda = 0$. The mass-shell condition $g^{\mu\nu}p_\mu p_\nu = 0$ is scale invariant and therefore there are d independent momenta. These can be used to determine the integration constants of the HJ function S via the equation

$$p_\mu^0 = \partial_\mu S|_{\lambda=0} \ . \tag{A.8}$$

Therefore we can use the HJ equation to embed a given null geodesic into a twist free null geodesic congruence determined by the solution S.

Given a null geodesic γ, the coordinate transformation from the original coordinates x^μ of space-time to the Penrose coordinates can be defined using the HJ function S and coordinates x_0^μ of the Cauchy hypersurface, as follows:

We first parameterize the null geodesic congruence as described above

$$x^\mu = x^\mu(\lambda, x_0^\nu) \tag{A.9}$$

$$F(x_0^\mu) = 0 \ . \tag{A.10}$$

We have suppressed the integration constants α_μ because they are specified by the momentum of the null geodesic γ. Then we set

$$\begin{aligned} U &= \lambda \\ V &= S(x_0^\mu) \ . \end{aligned} \tag{A.11}$$

Note that $S(x^\mu) = S(x_0^\mu)$ because $\dot{S} = 0$. It remains to determine the coordinates Y^k from these data. For this observe that the level sets of S have null normal vector, because of (A.6), while the hypersurface $F = 0$ has a timelike normal vector. Thus we have

$$g^{\mu\nu}\partial_\mu S \partial_\nu F < 0 \ , \tag{A.12}$$

and the level sets of S intersect transversally the hypersurface $F = 0$. The coordinates Y^k are found by solving the equations $F(x_0^\mu) = 0$ and $S(x_0^\mu) = V$, i.e. Y^k are the coordinates of the transverse intersection of the $F = 0$ hypersurface with the level sets of the HJ function S. Using this, we can rewrite the first equation in (A.10) as

$$x^\mu = x^\mu(U, x_0^\nu(V, Y^k)) = x^\mu(U, V, Y^k) \ . \tag{A.13}$$

This is the transformation which relates a coordinate system on a space-time to the Penrose coordinates.

Note that for a generic space-time, there is no natural choice for the hypersurface $F = 0$, i.e. for the function F. Instead F should be thought of as a gauge fixing condition which is chosen at our convenience. The Penrose limit metric does not depend on the choice of F, different choices simply corresponding to different ways of labelling the geodesics of the congruence on which the adapted coordinates are based.

For the sake of completeness we will now show explicitly that in these coordinates the metric indeed takes the form (A.1) [12, 16]. First of all, we clearly have

$$g_{UU} = g_{\mu\nu}\frac{\partial x^\mu}{\partial \lambda}\frac{\partial x^\nu}{\partial \lambda} = 0 \tag{A.14}$$

because the geodesics $x^\mu(\lambda, x_0^\nu)$ are null. Moreover,

$$g_{UV} = g_{\mu\nu}\frac{\partial x^\mu}{\partial \lambda}\frac{\partial x^\nu}{\partial V} = g_{\mu\nu}g^{\mu\rho}\partial_\rho S\frac{\partial x^\mu}{\partial V} = \frac{\partial x^\mu}{\partial V}\partial_\mu S = \frac{\partial V}{\partial V} = 1 \ , \tag{A.15}$$

and

$$g_{Ui} = g_{\mu\nu}\frac{\partial x^\mu}{\partial \lambda}\frac{\partial x^\nu}{\partial Y^i} = g_{\mu\nu}g^{\mu\rho}\frac{\partial S}{\partial x^\rho}\frac{\partial x^\nu}{\partial Y^i} = \frac{\partial V}{\partial Y^i} = 0 \ . \tag{A.16}$$

B Generalisations: Brane Metrics, Isotropic Coordinates, Null Singularities

It is straightforward to generalise the analysis of section 2.3 to include longitudinal worldvolume directions,

$$f(r)(-dt^2) \to f(r)(-dt^2 + d\vec{y}^2) \ . \tag{B.1}$$

A parallel frame in the brane worldvolume directions is $E_i = f^{-1/2}\partial_{y^i}$, and

$$B_{ij} = \delta_{ij}\partial_u \log f(r(u))^{1/2} \tag{B.2}$$

which in turn leads to

$$A_{ij} = \delta_{ij} f(r(u))^{-1/2}\partial_u^2 \log f(r(u))^{1/2} \ . \tag{B.3}$$

The remaining of the components of A are as in section 2.3.

Likewise, for isotropic coordinates,

$$ds^2 = -f(r)dt^2 + h(r)(dr^2 + r^2 d\Omega_d^2) \ , \tag{B.4}$$

a straightforward calculation reveals that

$$\mathrm{tr}\, B = \partial_u \log\left(\dot{r} r^d f^{\frac{1}{2}} h^{\frac{d+1}{2}} \sin^{d-1}(\theta)\right) \tag{B.5}$$

and

$$B_{22} = \partial_u \log(h^{\frac{1}{2}} r \sin(\theta)) \ . \tag{B.6}$$

These lead to

$$\begin{aligned} B_{11}(u) &= \partial_u \log(r\dot{r}hf^{1/2}) \\ B_{\hat{a}\hat{b}}(u) &= \delta_{\hat{a}\hat{b}} \partial_u \log(rh^{1/2} \sin\theta) \end{aligned} \tag{B.7}$$

with the corresponding second-derivative expressions for $A_{ab}(u)$. Again it is easy to include longitudinal directions.

Finally, we consider spherically symmetric null metrics of the form

$$ds^2 = 2g(x)dxdy + f(x)d\Omega_2^2 \ . \tag{B.8}$$

The geodesic equations are

$$\dot{x} = Pg^{-1} \quad , \quad \dot{y} = -\frac{L^2}{P} f^{-1} \quad , \quad \dot{\theta} = f^{-1} L \ , \tag{B.9}$$

where P and L are constants of motion. In this case, one finds

$$\mathrm{tr}\, B = \partial_u \log(\dot{x} g f \sin(\theta)) \tag{B.10}$$

and

$$B_{22} = \partial_u \log(f^{\frac{1}{2}} \sin(\theta)) \ . \tag{B.11}$$

Therefore, we have

$$\begin{aligned} K_1(u) &= P f(u)^{1/2} \\ K_2(u) &= f(u)^{1/2} \sin\theta(u) \ . \end{aligned} \tag{B.12}$$

In particular, in terms of $r(x) = f(x)^{1/2}$, A_{22} once again takes the standard form (2.40)

$$A_{22}(u) = \frac{\ddot{r}(u)}{r(u)} - \frac{L^2}{r(u)^4} \ . \tag{B.13}$$

C Curvature of Szekeres-Iyer Metrics

For reference purposes we give here the non-vanishing components of the Ricci and Einstein tensors of the metric (4.5),

$$ds^2 = \eta x^p dy^2 - \eta x^p dx^2 + x^q d\Omega_d^2 \tag{C.1}$$

(for $d = 2$, these results can be inferred from [17]). Indices i, j refer to the metric $\hat{g}_{ij}$ of the transverse sphere (or some other transverse space), with $\hat{R}_{ij}$ and $\hat{R}$ the corresponding Ricci tensor and Ricci scalar.

<u>Ricci Tensor</u>

$$\begin{aligned}
R_{xx} &= \tfrac{1}{4}(2p + 2qd + pqd - q^2 d)x^{-2} \\
R_{yy} &= \tfrac{1}{4}p(qd - 2)x^{-2} \\
R_{ij} &= \hat{R}_{ij} + \tfrac{1}{4}\eta q(qd - 2)\hat{g}_{ij}x^{q-p-2} \\
&= (d-1)\hat{g}_{ij} + \tfrac{1}{4}\eta q(qd - 2)\hat{g}_{ij}x^{q-p-2}
\end{aligned} \tag{C.2}$$

<u>Ricci Scalar</u>

$$\begin{aligned}
R &= \hat{R}x^{-q} - \tfrac{1}{4}\eta(4p + 4qd - d(d+1)q^2)x^{-(p+2)} \\
&= d(d-1)x^{-q} - \tfrac{1}{4}\eta(4p + 4qd - d(d+1)q^2)x^{-(p+2)}
\end{aligned} \tag{C.3}$$

<u>Einstein Tensor</u>

$$\begin{aligned}
G^x_x &= -\tfrac{1}{2}\hat{R}x^{-q} - \tfrac{1}{8}\eta dq((d-1)q + 2p)x^{-(p+2)} \\
&= -\tfrac{1}{2}d(d-1)x^{-q} - \tfrac{1}{8}\eta dq((d-1)q + 2p)x^{-(p+2)} \\
G^y_y &= -\tfrac{1}{2}\hat{R}x^{-q} + \tfrac{1}{8}\eta dq(2p + 4 - (d+1)q)x^{-(p+2)} \\
&= -\tfrac{1}{2}d(d-1)x^{-q} + \tfrac{1}{8}\eta dq(2p + 4 - (d+1)q)x^{-(p+2)} \\
G^i_j &= \hat{G}^i_j x^{-q} + \tfrac{1}{8}\eta(4p - 4q + 4qd - d(d-1)q^2)\delta^i_j x^{-(p+2)} \\
&= -\tfrac{1}{2}(d-1)(d-2)\delta^i_j x^{-q} + \tfrac{1}{8}\eta(4p - 4q + 4qd - d(d-1)q^2)\delta^i_j x^{-(p+2)}
\end{aligned} \tag{C.4}$$

References

[1] M. Blau, J. Figueroa-O'Farrill, C. Hull, G. Papadopoulos, *A new maximally supersymmetric background of IIB superstring theory*, JHEP 0201 (2002) 047, hep-th/0110242.

[2] R.R.Metsaev, *Type IIB Green-Schwarz superstring in plane wave Ramond-Ramond background*, Nucl. Phys. B625 (2002) 70-96, hep-th/0112044.

[3] M. Blau, J. Figueroa-O'Farrill, C. Hull, G. Papadopoulos, *Penrose limits and maximal supersymmetry*, Class. Quant. Grav. 19 (2002) L87-L95, hep-th/0201081.

[4] D. Berenstein, J. Maldacena, H. Nastase, *Strings in flat space and pp waves from $\mathcal{N} = 4$ Super Yang Mills*, JHEP 0204 (2002) 013, hep-th/0202021.

[5] R.R. Metsaev, A.A. Tseytlin, *Exactly solvable model of superstring in Ramond-Ramond plane wave background*, Phys.Rev. D65 (2002) 126004, hep-th/0202109.

[6] R. Penrose, *Any spacetime has a plane wave as a limit*, in *Differential geometry and relativity*, Reidel, Dordrecht (1976) pp. 271–275.

[7] R. Gueven, *Plane wave limits and T-duality*, Phys. Lett. B482 (2000) 255–263, hep-th/0005061.

[8] M. Blau, J. Figueroa-O'Farrill, G. Papadopoulos, *Penrose limits, supergravity and brane dynamics*, Class. Quant. Grav. 19 (2002) 4753, hep-th/0202111.

[9] M. Blau, M. Borunda, M. O'Loughlin, G. Papadopoulos, *Penrose Limits and Spacetime Singularities*, Class. Quant. Grav. 21 (2004) L43–L49, hep-th/0312029.

[10] S. Hawking, G. Ellis, *The Large Scale Structure of Space-Time*, Cambridge University Press (1973).

[11] H. Fuji, K. Ito, Y. Sekino, *Penrose Limit and String Theories on Various Brane Backgrounds*, JHEP 0211 (2002) 005, hep-th/0209004.

[12] C. Patricot, *Kaigorodov spaces and their Penrose limits*, Class. Quant. Grav. 20 (2003) 2087-2102, hep-th/0302073.

[13] K. Kunze, *T-Duality and Penrose limits of spatially homogeneous and inhomogeneous cosmologies*, Phys. Rev. D68 (2003) 063517, gr-qc/0303038.

[14] G. Papadopoulos, J.G. Russo and A.A. Tseytlin, *Solvable model of strings in a time-dependent plane-wave background*, Class. Quant. Grav. 20 (2003) 969, hep-th/0211289.

[15] M. Blau, M. O'Loughlin, *Homogeneous Plane Waves*, Nucl. Phys. B654 (2003) 135-176, hep-th/0212135.

[16] M. Blau, *Plane Waves and Penrose Limits*, Lecture Notes for the ICTP School on Mathematics in String and Field Theory (June 2-13 2003).

[17] P. Szekeres, V. Iyer, *Spherically Symmetric Singularities and Strong Cosmic Censorship*, Phys. Rev. D 47 (1993) 4362-4371.

[18] M. Célérier, P. Szekeres, *Timelike and null focusing singularities in spherical symmetry: a solution to the cosmological horizon problem and a challenge to the cosmic censorship hypothesis*, Phys.Rev. D65 (2002) 123516, gr-qc/0203094.

[19] H.J. de Vega, N. Sanchez, *Strings falling into space-time singularities*, Phys. Rev. D45 (1992) 2783-2793; H.J. de Vega, M. Ramon Medrano, N. Sanchez, *Classical and quantum strings near spacetime singularities: gravitational plane waves with arbitrary polarization*, Class. Quant. Grav. 10 (1993) 2007-2019.

[20] R. Wald, *General Relativity*, University of Chicago Press, Chicago (1984).

[21] L.A. Pando Zayas, J. Sonnenschein, *On Penrose Limits and Gauge Theories*, JHEP 0205 (2002) 010, `hep-th/0202186`.

[22] D. Marolf, L. Pando Zayas, *On the Singularity Structure and Stability of Plane Waves*, JHEP 0301 (2003) 076, `hep-th/0210309`.

[23] F. Paiva, M. Reboucas, M. MacCallum, *On limits of space-times: a coordinate-free approach*, Class. Quant. Grav. 10 (1993) 1165-1178, `gr-qc/9302005`.

[24] L. Cornalba, M. Costa, *Time-dependent Orbifolds and String Cosmology*, Fortsch.Phys. 52 (2004) 145-199, `hep-th/0310099`.

[25] G.T. Horowitz, A.R. Steif, *Strings In Strong Gravitational Fields*, Phys. Rev. D42 (1990) 1950-1959.

[26] J. David, *Plane waves with weak singularities*, JHEP 0311 (2003) 064, `hep-th/0303013`.

[27] A. Giveon, B. Kol, A. Ori, A. Sever, *On the Resolution of the Time-Like Singularities in Reissner-Nordstrøm and Negative-Mass Schwarzschild*, `hep-th/0401209`.

[28] C. Callan, H. Lee, T. McLoughlin, J. Schwarz, I. Swanson, X. Wu, *Quantizing String Theory in $AdS_5 \times S^5$: Beyond the pp-Wave*, Nucl. Phys. B673 (2003) 3-40, `hep-th/0307032`.

[29] V.A. Belinskii, I.M. Khalatnikov and E.M. Lifshitz, *Oscillatory approach to a singular point in the relativistic cosmology*, Adv.Phys. 19 (1970) 525-573; V.A. Belinskii, I.M. Khalatnikov and E.M. Lifshitz, *A general solution of the Einstein equations with a time singularity*, Adv. Phys. 31 (1982) 639-667.

[30] A. Ori, E. Flanagan, *How generic are null spacetime singularities?*, Phys. Rev. D53 (1996) 1754-1758, `gr-qc/9508066`.

[31] A. Ori, *Null weak singularities in plane-symmetric spacetimes*, Phys. Rev. D57 (1998) 4745-4753, `gr-qc/9801086`; A. Ori, *Oscillatory null singularity inside realistic spinning black holes*, Phys. Rev. Lett. 83 (1999) 5423, `gr-qc/0103012`.

[32] P. Brady, S. Droz, S. Morsink, *The late-time singularity inside non-spherical black holes*, Phys. Rev. D58 (1998) 084034, `gr-qc/9805008`.

[33] M. Blau, P. Meessen, M. O'Loughlin, *Gödel, Penrose, anti-Mach: extra supersymmetries of time-dependent plane waves*, JHEP 0309 (2003) 072, `hep-th/0306161`.

[34] U. Yurtsever, *Comments on the instability of black-hole inner horizons*, Class. Quant. Grav. 10 (1993) L17-L24.

[35] M. Blau, M. O'Loughlin, G. Papadopoulos, A. Tseytlin, *Solvable Models of Strings in Homogeneous Plane Wave Backgrounds*, Nucl. Phys. B673 (2003) 57-97, `hep-th/0304198`.

[36] H. Goldstein, *Classical Mechanics*, Addison-Wesley, London (1980), Chapter 10.

[37] S. H. Benton, Jr. *The Hamilton-Jacobi Equation: A Global Approach*, Academic Press (1977), Chapter 1.